Ruijie RG-S5300-E， 5310-E Series Switches

Hardware Installation and Reference Guide

Document Version: V1.04
Date: 2023.03.01
Copyright © 2023 Ruijie Networks

Copyright

Copyright © 2023 Ruijie Networks

All rights are reserved in this document and this statement.

Any reproduction, excerption, backup, modification, transmission, translation or commercial use of this document or any portion of this document, in any form or by any means, without the prior written consent of Ruijie Networks is prohibited.

Trademark Ruijie Networks 锐捷 and Ruijie are owned by Ruijie Networks.

All other trademarks or registered trademarks mentioned in this document are owned by their respective owners.

Disclaimer

The products, services, or features you purchase are subject to commercial contracts and terms. Some or all of the products, services or features described in this document may not be within the scope of your purchase or use. Unless otherwise agreed in the contract, Ruijie Networks does not make any express or implied statement or guarantee for the content of this document.

Due to product version upgrades or other reasons, the content of this document will be updated from time to time. Ruijie Networks reserves the right to modify the content of the document without any notice or prompt.

This manual is for reference only. Ruijie Networks endeavors to ensure content accuracy and will not shoulder any responsibility for losses and damages caused due to content omissions, inaccuracies or errors.

Preface

Intended Audience

This document is intended for:

- Network engineers
- Technical support and servicing engineers
- Network administrators

Technical Support

- Ruijie Networks Website: https://www.ruijienetworks.com/
- Technical Support Website: https://ruijienetworks.com/support
- Case Portal: https://caseportal.ruijienetworks.com
- Community: https://community.ruijienetworks.com
- Technical Support Email: service_rj@ruijienetworks.com
- Skype: service_rj@ruijienetworks.com

Conventions

1. Conversions

Convention	Description
Bold font	Commands, command options, and keywords are in **bold** font.
Italic font	Arguments for which you supply values are in *italic* font.
[ ]	Elements in square brackets are optional.
{ x | y | z }	Alternative keywords are grouped in braces and separated by vertical bars.
[x | y | z]	Optional alternative keywords are grouped in brackets and separated by vertical bars.
&<1-n>	The argument before the sign (&) can be input for consecutive 1- n times.
//	Double slashes at the beginning of a line of code indicate a comment line.

2. Signs

The signs used in this document are described as follows:

Warning

An alert that calls attention to important rules and information that if not understood or followed can result in data loss or equipment damage.

Caution

An alert that calls attention to essential information that if not understood or followed can result in function failure or performance degradation.

Note

An alert that contains additional or supplementary information that if not understood or followed will not lead to serious consequences.

Specification

An alert that contains a description of product or version support.

3. Note

The manual offers configuration information (including model, port type and command line interface) for indicative purpose only. In case of any discrepancy or inconsistency between the manual and the actual version, the actual version prevails.

1 Product Overview

The RG-S5300-E and RG-S5310-E series switches are new generation layer 3 switches, providing high performance, consolidated security and multiple services. The switches are mainly applied to the access layer to provide line-rate switching and complete QoS policies, prioritizing some traffic over others to ensure important data transmission without lantency. The switches also support a wide variety of Ethernet interfaces with flexible media options for network construction.

There are 12 models available now.

Model	10/100/1000Base-T Adaptive Ethernet Port	GE SFP Port	10GE SFP+ Port	Management Port	USB Port	Console Port	RPS
RG-S5310-24GT4XS-E	24	N/A	4	1	1	1	Dual Power Supplies
RG-S5300-24GT2SFP2XS-E	24	2	2	1	1	1	Fixed Power Supply
RG-S5300-24GT4XS-E	24	N/A	4	1	1	1	Fixed Power Supply
RG-S5310-48GT4XS-E	48	N/A	4	1	1	1	Dual Power Supplies
RG-S5300-48GT2SFP2XS-E	48	2	2	1	1	1	Fixed Power Supply
RG-S5300-48GT4XS-E	48	N/A	4	1	1	1	Fixed Power Supply
RG-S5310-24GT4XS-P-E	24 (PoE+ Capable)	N/A	4	1	1	1	Dual Power Supplies
RG-S5300-24GT2SFP2XS-P-E	24 (PoE+ Capable)	2	2	1	1	1	Fixed Power Supply
RG-S5300-24GT4XS-P-E	24 (PoE+ Capable)	N/A	4	1	1	1	Fixed Power Supply
RG-S5310-24SFP4XS-E	N/A	24	4	1	1	1	Dual Power Supplies
RG-S5310-48SFP4XS-E	N/A	48	4	1	1	1	Dual Power

							Supplies
RG-S5310-48GT4XS-P-E	48 (PoE+ Capable)	N/A	4	1	1	1	Dual Power Supplies

This is a Class A product. In a domestic environment this product may cause radio interference. In this case, users are advised to take proper measures against the interference.

An SFP+ port supports both 10GBase-R and 1000Base-X.

The PoE+ port is backward compatible with the PoE standard.

- Management port: The management port is a 10/100/1000Base-T Ethernet port that uses an RJ-45 connector. This port is connected to an Ethernet port of a PC with an Ethernet cable for program downloading. You can manage and maintain the switch remotely by connecting the management port to the Ethernet port of a PC with an Ethernet cable.
- USB port: The USB port is the interface into which you plug your USB storage device for online upgrade or log storage.
- Console port: The console port is an RS-232 port that uses an RJ45 connector. The console port is used to connect a PC directly to the management system for debugging, configuration, maintenance, management and program loading.

1.1 RG-S5310-24GT4XS-E

Specifications

Model	RG-S5310-24GT4XS-E
CPU	Dual-core CPU with the clock speed of 1.2 GHz
BOOTROM	16 MB
Flash Memory	2 GB
SDRAM	1 GB
SFP Module Type	SFP+ Port: SFP Modules and SFP BIDI Modules SFP+ Modules, SFP+ Cables and SFP+ BIDI Modules. See Chapter 7 for details. The module types may update without prior notification. Please contact Ruijie Networks for details.
Power Supply Module Slots	2
Power Supply Module	• Model: RG-PA70IB AC Input Rated Voltage Range: 100 V AC to 240 V AC Maximum Voltage Range: 90 V AC to 264 V AC Frequency: 50 Hz/60 Hz Rated Current Per Circuit: 2 A • Model: RG-PA150IB-F

	AC Input Rated Voltage Range: 100 V AC to 240 V AC Maximum Voltage Range: 90 V AC to 264 V AC Frequency: 50 Hz/60 Hz Rated Current Per Circuit: 3 A ● Model: RG-PD150IB-F DC Input Rated Voltage Range: -48 V DC to -60 V DC Maximum Voltage Range: -36 V DC to -75 V DC Rated Current Per Circuit: 5 A
SFP+ Port	10GBase-R Capable 1000Base-X Capable
RTC	Supported
PoE	Not Supported
Power Consumption	< 40 W
Operating Temperature	0ºC to 45ºC (32ºF to 113 ºF) at a height below 1800 m (1.12 miles) above the sea level At a height ranging from 1800 m (1.12 miles) to 5000 m (3.11 miles) above the sea level, the maximum operating temperature decreases by 1°C (1.8°F) every time the altitude increases by 220 m (721.78 ft.).
Storage Temperature	-40ºC to 70ºC (-40ºF to 158ºF)
Operating Humidity	10% to 90% RH (non-condensing)
Operating Height	0 to 5000 m (3.11 miles) above the sea level
Storage Humidity	5% to 95% RH (non-condensing)
Fan	Fan Speed Control Fan Fault Alarming
Temperature Alarming	Supported
EMI Certification	GB9254-2008CLASS A
Safety Regulation Compliance	GB4943-2011
Dimensions (W x D x H)	442 mm x 420 mm x 43.6 mm (17.40 in. x 16.54 in. x 1.72 in.)
Weight	4 kg (8.82 lbs.)

Appearance

The front panel of the RG-S5310-24GT4XS-E switch provides 24 10/100/1000Base-T Ethernet ports, four 10GE SFP+ ports, one management port, one Console port and one USB port. The back panel has two power supply module slots.

Figure 1-1 RG-S5310-24GT4XS-E Switch Appearance

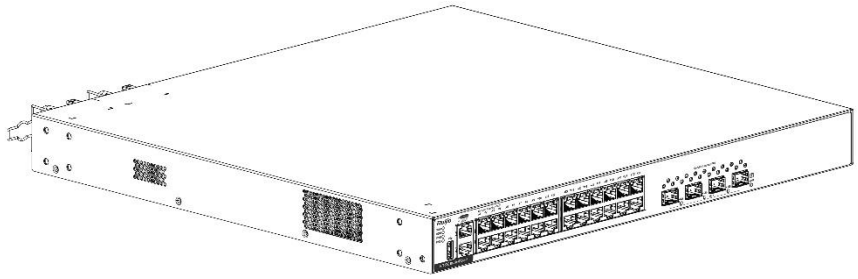

Front Panel

Figure 1-2 Front Panel of RG-S5310-24GT4XS-E

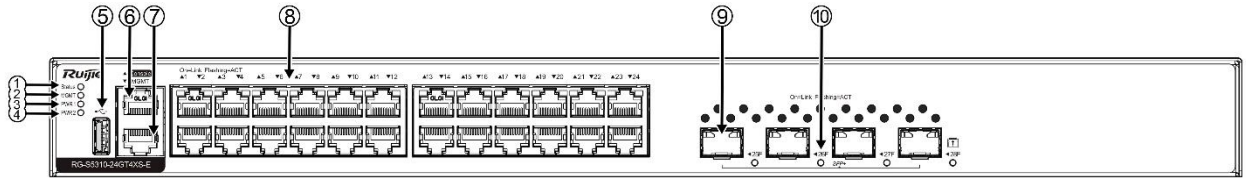

1. System Status LED	7. Management Port
2. MGMT Port LED	8. 10/100/1000Base-T Ethernet Port
3. PWR1 Status LED	9. 10GE SFP+ Port
4. PWR2 Status LED	10. Port Status LED
5. USB Port	
6. Console Port	

Back Panel

Figure1-3 Back Panel of RG-S5310-24GT4XS-E

1. Grounding Stud
2. Power Supply Module Slot 1 (A filler panel is required if the slot is vacant.)
3. Power Supply Module Slot 2 (A filler panel is required if the slot is vacant.)

Power Supply Module

The RG-S5310-24GT4XS-E switch supports dual power supply modules. See Chapter 1.13 for details about the power supply modules.

The switch can be powered on by either one power supply module or dual power supply modules. If both power supply modules are used, the switch works in the power redundancy mode.

Cooling

The RG-S5310-24GT4XS-E switch adopts a left-to-right and front-to-right airflow to ensure normal operation. Maintain a minimum clearance of 100 mm (3.94 in.) around the device for air circulation.

Figure 1-4 Airflow Direction

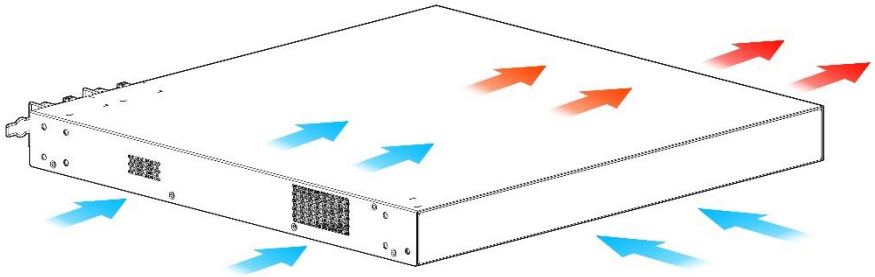

LED

Function	Panel ID	Color	Status
System Status LED	Status	Off	System is not powered on.
		Blinking Green (3 Hz)	System is being initialized. Continuous blinking indicates a fault.
		Blinking Green (10 Hz)	System is being located.
		Solid Green	System is operating normally.
		Solid Yellow	The temperature at the air intake and exhaust vents exceeds the threshold.
		Solid Red	1. The temperature at the air intake and exhaust vents well exceeds the threshold. 2. The system is not functioning properly.
Power Supply Status LED	PWR1/PWR2	Off	The power supply module is not seated.
		Solid Green	The power supply module is seated and providing power to the switch.
		Solid Yellow	The model of the power supply module is not supported or cannot be read.
		Solid Red	The redundant power supply module is not functioning properly or not connected with the AC power cord.
Management Port LED	MGMT	Off	No link is detected for this port.
		Solid Green	The port has made a successful 1000 Mbps link.
		Blinking Green	The port is sending and receiving traffic at 1000 Mbps.
		Solid Yellow	The port has made a successful 10/100 Mbps link.
		Blinking Yellow	The port is sending and receiving traffic at 10/100 Mbps.
10GE SFP+ Port LED	25F to 28F	Off	No link is detected for this port.

		Solid Green	The port has made a successful 1/10 Gbps link.
		Blinking Green	The port is sending and receiving traffic at 1/10 Gbps.
10/100/1000Base-T Ethernet Port LED	1F to 24F	Off	No link is detected for this port.
		Solid Green	The port has made a successful 10/100/1000 Mbps link.
		Blinking Green	The port is sending and receiving traffic at 10/100/1000 Mbps.

1.2 RG-S5300-24GT2SFP2XS-E

Specifications

Model	RG-S5300-24GT2SFP2XS-E
CPU	Dual-core CPU with the clock speed of 1.2 GHz
BOOTROM	16 MB
Flash Memory	2 GB
SDRAM	1 GB
SFP and SFP+ Module Type	SFP Port: SFP Modules and SFP BIDI Modules. SFP+ Port: SFP Modules and SFP BIDI Modules. SFP+ Modules, SFP+ Cables and SFP BIDI Modules. See Chapter 7 for details. The module types may update without prior notification. Please contact Ruijie Networks for details.
Built-in Power Supply	AC Input Rated Voltage Range: 100 V AC to 240 V AC Maximum Voltage Range: 90 V AC to 264 V AC Frequency: 50 Hz/60 Hz Rated Current Per Circuit: 1.5 A
SFP Port	1000Base-X Capable
SFP+ Port	10GBase-R Capable 1000Base-X Capable
RTC	Supported
PoE	Not supported
Power Consumption	< 40 W
Operating Temperature	0ºC to 45ºC (32ºF to 113 ºF) at a height below 1800 m (1.12 miles) above the sea level At a height ranging from 1800 m (1.12 miles) to 5000 m (3.11 miles) above the sea level, the maximum operating temperature decreases by 1°C (1.8°F) every time the altitude increases by 220 m (721.78 ft.).
Storage Temperature	-40ºC to 70ºC (-40ºF to 158ºF)
Operating Humidity	10% to 90% RH (non-condensing)
Operating Height	0 to 5000 m (3.11 miles) above the sea level

Storage Humidity	5% to 95% RH (non-condensing)
Fan	Fan Speed Control Fan Fault Alarming
Temperature Alarming	Supported
EMI Certification	GB9254-2008CLASS A
Safety Regulation Compliance	GB4943-2011
Dimensions (W x D x H)	442 mm x 220 mm x 43.6 mm (17.40 in. x 8.66 in. x 1.72 in.)
Weight	2.7 kg (5.95 lbs.)

Appearance

The front panel of the RG-S5300-24GT2SFP2XS-E switch provides 24 10/100/1000Base-T Ethernet ports, two GE SFP ports, two 10GE SFP+ ports (The speed is 1000 Mbps by default and can be improved to 10 Gbps if you purchase a license. Without a license, the port can make a successful link only when the peer end speed is 1000 Mpbs. If configured as a VSL port, the port supports a speed of 10 Gbps without the license), one management port, one Console port and one USB port. The back panel has an AC power plug.

Figure 1-5 RG-S5300-24GT2SFP2XS-E Switch Appearance

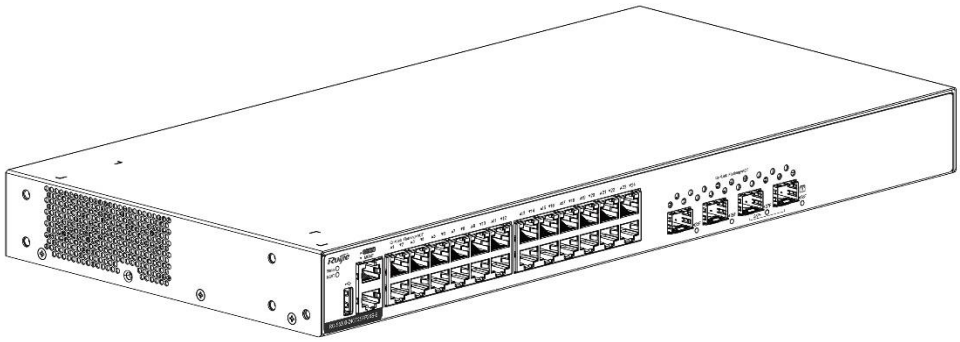

Front Panel

Figure 1-6 Front Panel of RG-S5300-24GT2SFP2XS-E

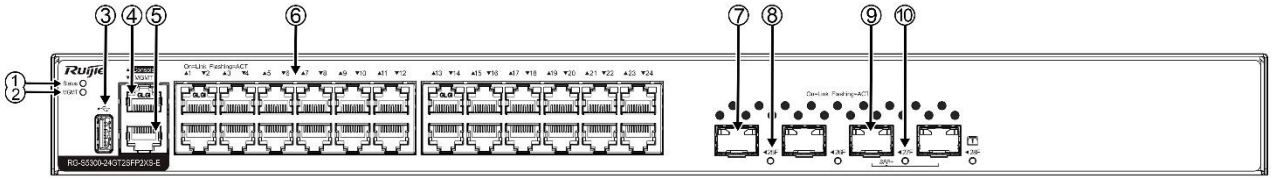

1. System Status LED
2. MGMT Port LED
3. USB Port
4. Console Port
5. Management Port
6. 10/100/1000Base-T Ethernet Port
7. GE SFP Port
8. GE SFP Port LED
9. 10GE SFP+ Port
10. 10GE SFP+ Port LED

Back Panel

Figure1-7 Back Panel of RG-S5300-24GT2SFP2XS-E

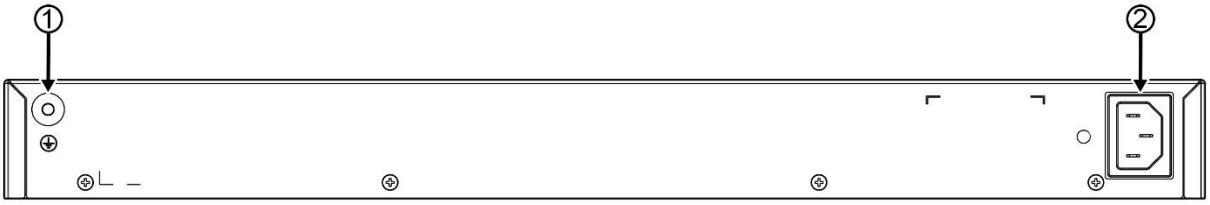

1. Grounding Stud
2. AC Power Plug

Power Supply

The RG-S5300-24GT2SFP2XS-E switch has a built-in power supply module. The back panel has an AC power plug.

Cooling

The RG-S5300-24GT2SFP2XS-E switch adopts a left-to-right and front-to-right airflow to ensure normal operation. Maintain a minimum clearance of 100 mm (3.94 in.) around the device for air circulation.

Figure 1-8 Airflow Direction

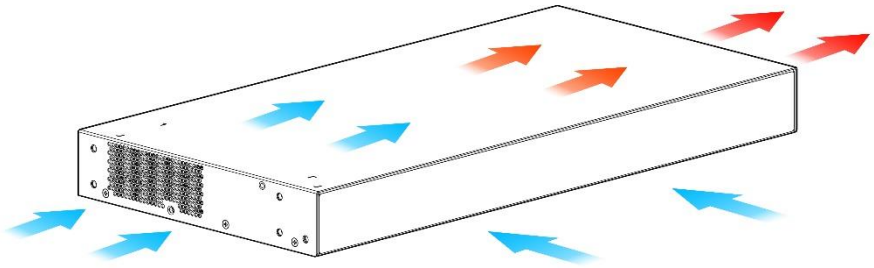

LED

Function	Panel ID	Color	Status
System Status LED	Status	Off	System is not powered on.
		Blinking Green (3 Hz)	System is being initialized. Continuous blinking indicates a fault.
		Blinking Green (10 Hz)	System is being located.

		Solid Green	System is operating normally.
		Solid Yellow	The temperature at the air intake and exhaust vents exceeds the threshold.
		Solid Red	1. The temperature at the air intake and exhaust vents well exceeds the threshold. 2. The system is not functioning properly.
MGMT Port LED	MGMT	Off	No link is detected for this port.
		Solid Green	The port has made a successful 1000 Mbps link.
		Blinking Green	The port has made a successful 1000 Mbps link.
		Solid Yellow	The port has made a successful 10/100 Mbps link.
		Blinking Yellow	The port is sending and receiving traffic at 10/100 Mbps.
10GE SFP+ Port LED	27F to 28F	Off	No link is detected for this port.
		Solid Green	The port has made a successful 1/10 Gbps link.
		Blinking Green	The port is sending and receiving traffic at 1/10 Gbps.
GE SFP Port LED	25F to 26F	Off	No link is detected for this port.
		Solid Green	The port has made a successful 1000 Mbps link.
		Blinking Green	The port is sending and receiving traffic at 1000 Mbps.
10/100/1000Base-T Ethernet Port LED	1F to 24F	Off	No link is detected for this port.
		Solid Green	The port has made a successful 10/100/1000 Mbps link.
		Blinking Green	The port is sending and receiving traffic at 10/100/1000 Mbps.

1.3 RG-S5300-24GT4XS-E

Specifications

Model	RG-S5300-24GT4XS-E
CPU	Dual-core CPU with the clock speed of 1.2 GHz
BOOTROM	16 MB
Flash Memory	2 GB
SDRAM	1 GB
SFP Module Type	SFP+ Port: SFP Modules and SFP BIDI Modules SFP+ Modules, SFP+ Cables and SFP+ BIDI Modules. See Chapter 7 for details. The module types may update without prior notification. Please contact Ruijie Networks for details.
Built-in Power Supply	AC Input Rated Voltage Range: 100 V AC to 240 V AC Maximum Voltage Range: 90 V AC to 264 V AC Frequency: 50 Hz/60 Hz

	Rated Current Per Circuit: 1.5 A
SFP+ Port	10GBase-R Capable 1000Base-X Capable
RTC	Supported
PoE	Not supported
Power Consumption	< 40 W
Operating Temperature	0ºC to 45ºC (32ºF to 113 ºF) at a height below 1800 m (1.12 miles) above the sea level At a height ranging from 1800 m (1.12 miles) to 5000 m (3.11 miles) above the sea level, the maximum operating temperature decreases by 1°C (1.8°F) every time the altitude increases by 220 m (721.78 ft.).
Storage Temperature	-40ºC to 70ºC (-40ºF to 158ºF)
Operating Humidity	10% to 90% RH (non-condensing)
Operating Height	0 to 5000 m (3.11 miles) above the sea level
Storage Humidity	5% to 95% RH (non-condensing)
Fan	Fan Speed Control Fan Fault Alarming
Temperature Alarming	Supported
EMI Certification	GB9254-2008CLASS A
Safety Regulation Compliance	GB4943-2011
Dimensions (W x D x H)	442 mm x 220 mm x 43.6 mm (17.40 in. x 8.66 in. x 1.72 in.)
Weight	2.7 kg (5.95 lbs.)

Appearance

The front panel of the RG-S5300-24GT4XS-E switch provides 24 10/100/1000Base-T Ethernet ports, four 10GE SFP+ ports, one management port, one Console port and one USB port. The back panel has an AC power plug.

Figure 1-9 RG-S5300-24GT4XS-E Switch Appearance

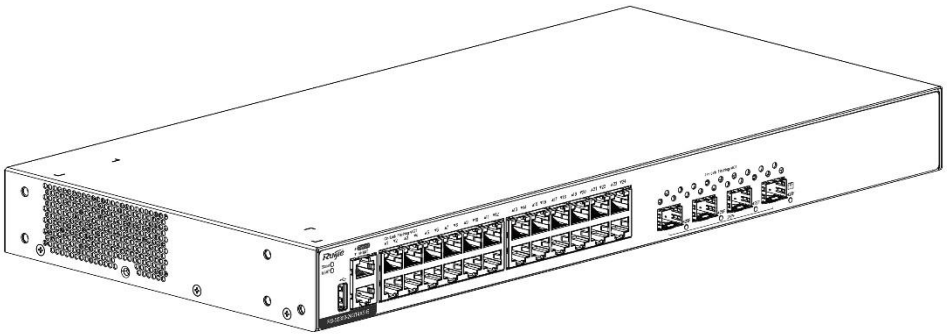

Front Panel

Figure 1-10 Front Panel of RG-S5300-24GT4XS-E

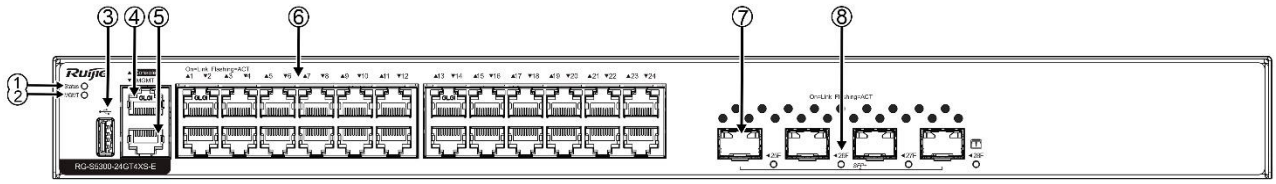

1. System Status LED	7. 10GE SFP+ Port
2. Management Port LED	8. Port LED
3. USB Port	
4. Console Port	
5. Management Port	
6. 10/100/1000Base-T Ethernet Port	

Back Panel

Figure1-11 Back Panel of RG-S5300-24GT4XS-E

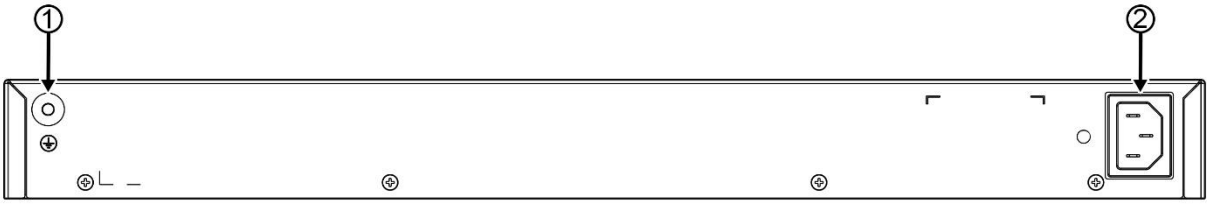

1. Grounding Stud
2. AC Power Plug

Power Supply

The RG-S5300-24GT4XS-E switch has a built-in power supply module. The back panel has an an AC power plug.

Cooling

The RG-S5300-24GT4XS-E switch adopts a left-to-right and front-to-right airflow to ensure normal operation. Maintain a minimum clearance of 100 mm (3.94 in.) around the device for air circulation.

Figure 1-12 Airflow Direction

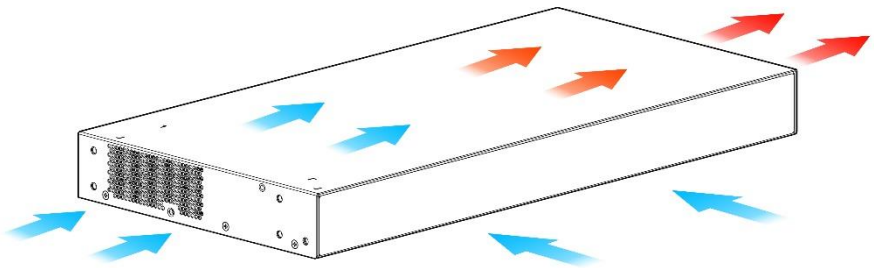

LED

Function	Panel ID	Color	Status
System Status LED	Status	Off	System is not powered on.
		Blinking Green (3 Hz)	System is being initialized. Continuous blinking indicates a fault.
		Blinking Green (10 Hz)	System is being located.
		Solid Green	System is operating normally.
		Solid Yellow	The temperature at the air intake and exhaust vents exceeds the threshold.
		Solid Red	1. The temperature at the air intake and exhaust vents well exceeds the threshold. 2. The system is not functioning properly.
Management Port LED	MGMT	Off	No link is detected for this port.
		Solid Green	The port has made a successful 1000 Mbps link.
		Blinking Green	The port is sending and receiving traffic at 1000 Mbps.
		Solid Yellow	The port has made a successful 10/100 Mbps link.
		Blinking Yellow	The port is sending and receiving traffic at 10/100 Mbps.
10GE SFP+ Port LED	25F to 28F	Off	No link is detected for this port.
		Solid Green	The port has made a successful 1/10 Gbps link.
		Blinking Green	The port is sending and receiving traffic at 1/10 Gbps.
10/100/1000Base-T Ethernet Port LED	1F to 24F	Off	No link is detected for this port.
		Solid Green	The port has made a successful 10/100/1000 Mbps link.
		Blinking Green	The port is sending and receiving traffic at 10/100/1000 Mbps.

1.4 RG-S5310-48GT4XS-E

Specifications

Model	RG-S5310-48GT4XS-E
CPU	Dual-core CPU with the clock speed of 1.2 GHz
BOOTROM	16 MB
Flash Memory	2 GB
SDRAM	1 GB
SFP Module Type	● SFP+ Port: ● SFP Modules and SFP BIDI Modules ● SFP+ Modules, SFP+ Cables and SFP+ BIDI Modules. ● See Chapter 7 for details.

	The module types may update without prior notification. Please contact Ruijie Networks for details.
Power Supply Module Slots	2
Power Supply Module	● RG-PA70IB AC Input Rated Voltage Range: 100 V AC to 240 V AC Maximum Voltage Range: 90 V AC to 264 V AC Frequency: 50 Hz/60 Hz Rated Current Per Circuit: 2 A ● RG-PA150IB-F AC Input Rated Voltage Range: 100 V AC to 240 V AC Maximum Voltage Range: 90 V AC to 264 V AC Frequency: 50 Hz/60 Hz Rated Current Per Circuit: 3 A ● RG-PD150IB-F DC Input Rated Voltage Range: -48 V DC to -60 V DC Maximum Voltage Range: -36 V DC to -75 V DC Rated Current Per Circuit: 5 A
SFP+ Port	10GBase-R Capable 1000Base-X Capable
RTC	Supported
PoE	Not supported
Power Consumption	< 55 W
Operating Temperature	0ºC to 45ºC (32ºF to 113 ºF) at a height below 1800 m (1.12 miles) above the sea level At a height ranging from 1800 m (1.12 miles) to 5000 m (3.11 miles) above the sea level, the maximum operating temperature decreases by 1°C (1.8°F) every time the altitude increases by 220 m (721.78 ft.).
Storage Temperature	-40ºC to 70ºC (-40ºF to 158ºF)
Operating Humidity	10% to 90% RH (non-condensing)
Operating Height	0 to 5000 m (3.11 miles) above the sea level
Storage Humidity	5% to 95% RH (non-condensing)
Fan	Fan Speed Control Fan Fault Alarming
Temperature Alarming	Supported
EMI Certification	GB9254-2008CLASS A
Safety Regulation Compliance	GB4943-2011
Dimensions	442 mm x 420 mm x 43.6 mm (17.40 in. x 16.54 in. x 1.72 in.)

(W x D x H)	
Weight	4.3 kg (9.48 lbs.)

Appearance

The front panel of the RG-S5310-48GT4XS-E Ethernet switch provides 48 10/100/1000Base-T Ethernet ports, four 10GE SFP+ ports, one management port, one Console port and one USB port. The back panel has two power supply module slots.

Figure 1-13 RG-S5310-48GT4XS-E Switch Appearance

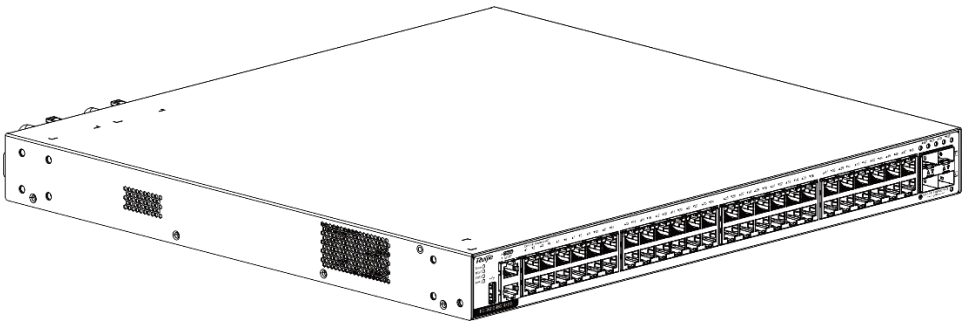

Front Panel

Figure 1-14 Front Panel of RG-S5310-48GT4XS-E

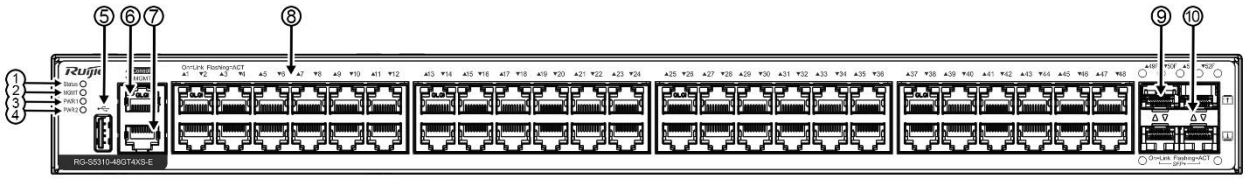

1. System Status LED	7. Management Port
2. Management Port LED	8. 10/100/1000Base-T Ethernet Port
3. PWR1 Status LED	9. 10GE SFP+ Port
4. PWR2 Status LED	10. Port LED
5. USB Port	
6. Console Port	

Back Panel

Figure 1-15 Back Panel of RG-S5310-48GT4XS-E

1. Grounding Stud
2. Power Supply Module Slot 1 (A filler panel is required if the slot is vacant.)
3. Power Supply Module Slot 2 (A filler panel is required if the slot is vacant.)

Power Supply

The RG-S5310-48GT4XS-E switch supports dual power supply modules. See Chapter 1.13 for details about the power supply modules.

The switch can be powered on by either one power supply module or dual power supply modules. If both power supply modules are used, the switch works in the power redundancy mode.

Cooling

The RG-S5310-48GT4XS-E switch adopts a left-to-right and front-to-right airflow to ensure normal operation. Maintain a minimum clearance of 100 mm (3.94 in.) around the device for air circulation.

Figure 1-16 Airflow Direction

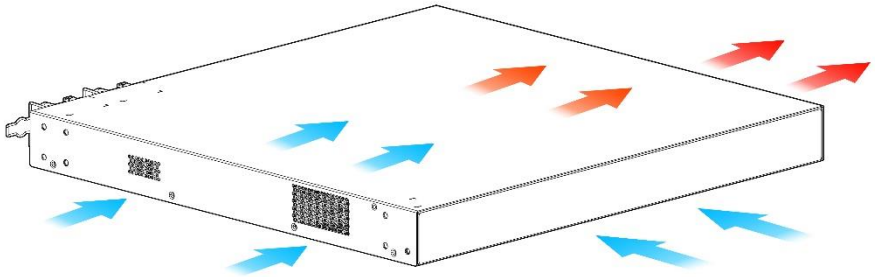

LED

Function	Panel ID	Color	Status
System Status LED	Status	Off	System is not powered on.
		Blinking Green (3 Hz)	System is being initialized. Continuous blinking indicates a fault.
		Blinking Green (10 Hz)	System is being located.
		Solid Green	System is operating normally.
		Solid Yellow	The temperature at the air intake and exhaust vents exceeds the threshold.
		Solid Red	1. The temperature at the air intake and exhaust vents well exceeds the threshold. 2. The system is not functioning properly.
Power Supply Status LED	PWR1/PWR2	Off	The power supply module is not seated.
		Solid Green	The power supply module is seated and providing power to the switch.
		Solid Yellow	The model of the power supply module is not

			supported or cannot be identified.
		Solid Red	The redundant power supply module is not functioning properly or not connected with the AC power cord.
Management Port LED	MGMT	Off	No link is detected for this port.
		Solid Green	The port has made a successful 1000 Mbps link.
		Blinking Green	The port is sending and receiving traffic at 1000 Mbps.
		Solid Yellow	The port has made a successful 10/100 Mbps link.
		Blinking Yellow	The port is sending and receiving traffic at 10/100 Mbps.
10GE SFP+ Port LED	49F to 52F	Off	No link is detected for this port.
		Solid Green	The port has made a successful 1/10 Gbps link.
		Blinking Green	The port is sending and receiving traffic at 1/10 Gbps.
10/100/1000Base-T Ethernet Port LED	1F to 48F	Off	No link is detected for this port.
		Solid Green	The port has made a successful 10/100/1000 Mbps link.
		Blinking Green	The port is sending and receiving traffic at 10/100/1000 Mbps.

1.5 RG-S5300-48GT2SFP2XS-E

Specifications

Model	RG-S5300-48GT2SFP2XS-E
CPU	Dual-core CPU with the clock speed of 1.2 GHz
BOOTROM	16 MB
Flash Memory	2 GB
SDRAM	1 GB
SFP Module	● SFP Port: ● SFP Modules and SFP BIDI Modules ● SFP+ Port: ● SFP Modules and SFP BIDI Modules ● SFP+ Modules, SFP+ Cables and SFP+ BIDI Modules. ● See Chapter 7 for details. ⚠ The module types may update without prior notification. Please contact Ruijie Networks for details.
Built-in Power Supply	AC Input Rated Voltage Range: 100 V AC to 240 V AC Maximum Voltage Range: 90 V AC to 264 V AC Frequency: 50 Hz/60 Hz Rated Current Per Circuit: 2 A
SFP Port	1000Base-X Capable

SFP+ Port	10GBase-R Capable 1000Base-X Capable
RTC	Supported
PoE	Not supported
Power Consumption	< 55 W
Temperature	0ºC to 45ºC (32ºF to 113 ºF) at a height below 1800 m (1.12 miles) above the sea level At a height ranging from 1800 m (1.12 miles) to 5000 m (3.11 miles) above the sea level, the maximum operating temperature decreases by 1°C (1.8°F) every time the altitude increases by 220 m (721.78 ft.).
Storage Temperature	-40ºC to 70ºC (-40ºF to 158ºF)
Operating Humidity	10% to 90% RH (non-condensing)
Operating Height	0 to 5000 m (3.11 miles) above the sea level
Storage Humidity	5% to 95% RH (non-condensing)
Fan	Fan Speed Control Fan Fault Alarming
Temperature Alarming	Supported
EMI Certification	GB9254-2008CLASS A
Safety Regulation Compliance	GB4943-2011
Dimensions (W x D x H)	442 mm x 220 mm x 43.6 mm (17.40 in. x 8.66 in. x 1.72 in.)
Weight	3 kg (6.61 lbs.)

Appearance

The front panel of the RG-S5300-48GT2SFP2XS-E switch provides 48 10/100/1000Base-T Ethernet ports, two GE SFP ports, two 10GE SFP+ ports (The speed is 1000 Mbps by default and can be improved to 10 Gbps if you purchase a license. Without a license, the port can make a successful link only when the peer end speed is 1000 Mpbs. If configured as a VSL port, the port supports a speed of 10 Gbps without the license), one management port, one Console port and one USB port. The back panel has an AC power input plug.

Figure 1-17 RG-S5300-48GT2SFP2XS-E Switch Appearance

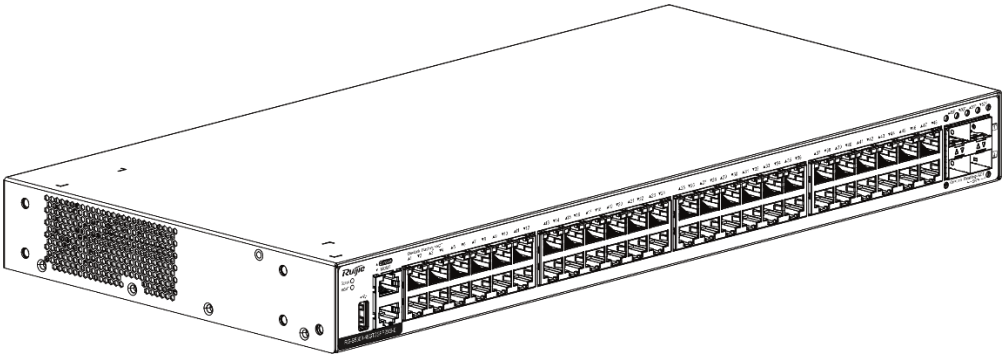

Front Panel

Figure 1-18 Front Panel of RG-S5300-48GT2SFP2XS-E

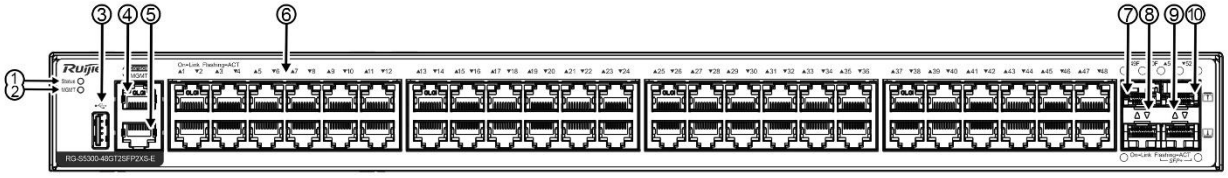

1. System Status LED	7. GE SFP Port
2. Management Port LED	8. GE SFP Port LED
3. USB Port	9. 10GE SFP+ Port LED
4. Console Port	10. 10GE SFP+ Port
5. Management Port	
6. 10/100/1000Base-T Ethernet Port	

Back Panel

Figure 1-19 Back Panel of RG-S5300-48GT2SFP2XS-E

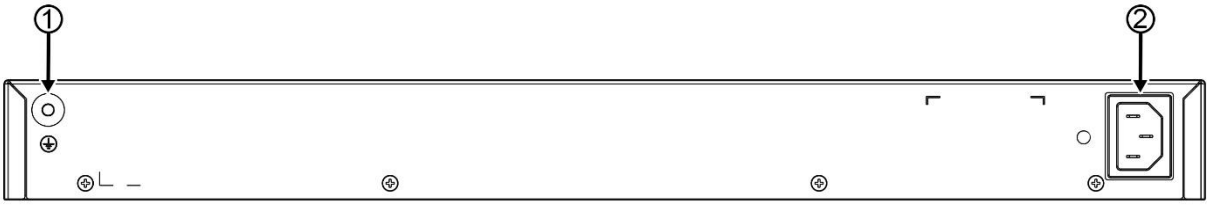

1. Grounding Stud
2. AC Power Plug

Power Supply

The RG-S5300-48GT2SFP2XS-E switch has a built-in power supply module. The back panel has an AC power plug.

Cooling

The RG-S5300-48GT2SFP2XS-E switch adopts a left-to-right and front-to-right airflow to ensure normal operation. Maintain a minimum clearance of 100 mm (3.94 in.) around the device for air circulation.

Figure 1-20 Airflow Direction

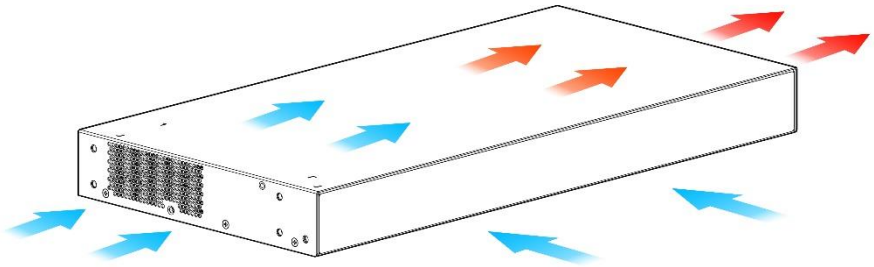

LED

Function	Panel ID	Color	Status
System Status LED	Status	Off	System is not powered on.
		Blinking Green (3 Hz)	System is being initialized. Continuous blinking indicates a fault.
		Blinking Green (10 Hz)	System is being located.
		Solid Green	System is operating normally.
		Solid Yellow	The temperature at the air intake and exhaust vents exceeds the threshold.
		Solid Red	1. The temperature at the air intake and exhaust vents well exceeds the threshold. 2. The system is not functioning properly.
Management Port LED	MGMT	Off	No link is detected for this port.
		Solid Green	The port has made a successful 1000 Mbps link.
		Blinking Green	The port is sending and receiving traffic at 1000 Mbps.
		Solid Yellow	The port has made a successful 10/100 Mbps link.
		Blinking Yellow	The port is sending and receiving traffic at 10/100 Mbps.
10GE SFP+ Port LED	51F to 52F	Off	No link is detected for this port.
		Solid Green	The port has made a successful 1/10 Gbps link.
		Blinking Green	The port is sending and receiving traffic at 1/10 Gbps.
GE SFP Port Indicator	49F to 50F	Off	No link is detected for this port.
		Solid Green	The port has made a successful 1000 Mbps link.
		Blinking Green	The port is sending and receiving traffic at 1000 Mbps.
10/100/1000Base-T Ethernet Port LED	1F to 48F	Off	No link is detected for this port.
		Solid Green	The port has made a successful 10/100/1000 Mbps link.
		Blinking Green	The port is sending and receiving traffic at 10/100/1000 Mbps.

1.6 RG-S5300-48GT4XS-E

Specifications

Model	RG-S5300-48GT4XS-E
CPU	Dual-core CPU with the clock speed of 1.2 GHz
BOOTROM	16 MB
Flash Memory	2 GB
SDRAM	1 GB
SFP Module Type	● SFP+ Port: ● SFP Modules and SFP BIDI Modules ● SFP+ Modules, SFP+ Cables and SFP+ BIDI Modules. ● See Chapter 7 for details. ⚠ The module types may update without prior notification. Please contact Ruijie Networks for details.
Built-in Power Supply	● AC Input ● Rated Voltage Range: 100 V AC to 240 V AC ● Maximum Voltage Range: 90 V AC to 264 V AC ● Frequency: 50 Hz/60 Hz ● Rated Current Per Circuit: 2 A
SFP+ Port	10GBase-R Capable 1000Base-X Capable
RTC	Supported
PoE	Not Supported
Power Consumption	< 55 W
Operating Temperature	0ºC to 45ºC (32ºF to 113 ºF) at a height below 1800 m (1.12 miles) above the sea level At a height ranging from 1800 m (1.12 miles) to 5000 m (3.11 miles) above the sea level, the maximum operating temperature decreases by 1°C (1.8°F) every time the altitude increases by 220 m (721.78 ft.).
Storage Temperature	-40ºC to 70ºC (-40ºF to 158ºF)
Operating Humidity	10% to 90% RH (non-condensing)
Operating Height	0 to 5000 m (3.11 miles) above the sea level
Storage Humidity	5% to 95% RH (non-condensing)
Fan	Fan Speed Control Fan Fault Alarming
Temperature Alarming	Supported
EMI Certification	GB9254-2008CLASS A
Safety Regulation Compliance	GB4943-2011
Dimensions	442 mm x 220 mm x 43.6 mm (17.40 in. x 8.66 in. x 1.72 in.)

(W x D x H)	
Weight	3 kg (6.61 lbs.)

Appearance

The front panel of the RG-S5300-48GT4XS-E switch provides 48 10/100/1000Base-T Ethernet ports, four 10GE SFP+ ports, one management port, one Console port and one USB port. The back panel has an AC power plug.

Figure 1-21 RG-S5300-48GT4XS-E Switch Appearance

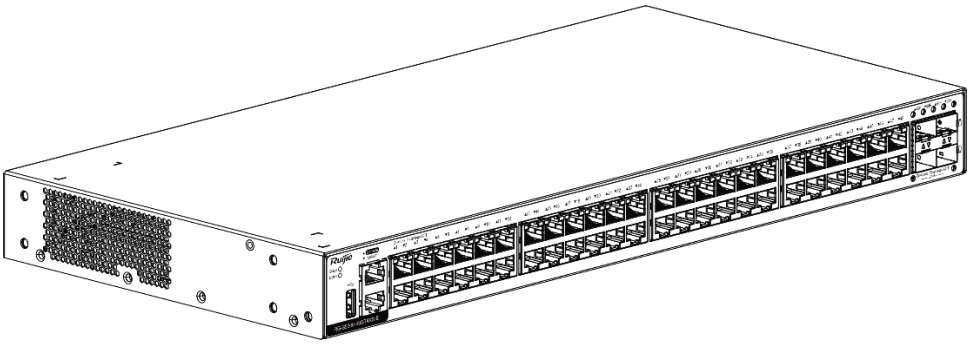

Front Panel

Figure 1-22 Front Panel of RG-S5300-48GT4XS-E

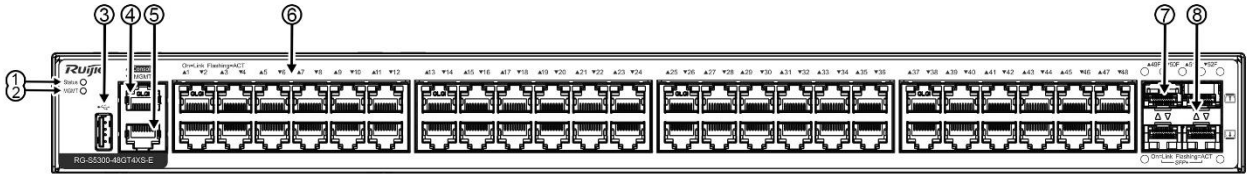

1. System Status LED	7. 10GE SFP+ Port
2. Management Port LED	8. Port LED
3. USB Port	
4. Console Port	
5. Management Port	
6. 10/100/1000Base-T Ethernet Port	

Back Panel

Figure 1-23 Back Panel of RG-S5300-48GT4XS-E

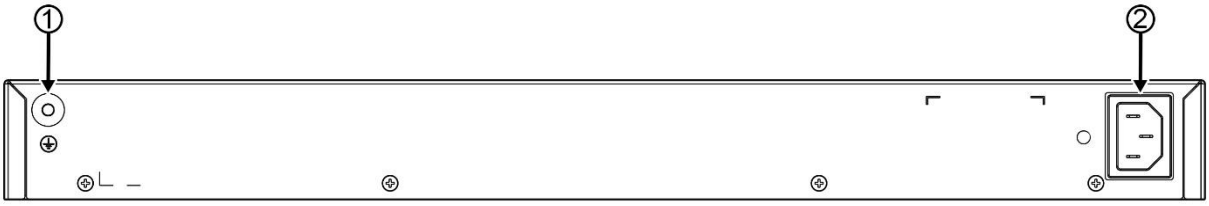

1. Grounding Stud
2. AC Power Plug

Power Supply

The RG-S5300-48GT4XS-E switch has a built-in power supply module. The back panel has an AC power plug.

Cooling

The RG-S5300-48GT4XS-E switch adopts a left-to-right and front-to-right airflow to ensure normal operation. Maintain a minimum clearance of 100 mm (3.94 in.) around the device for air circulation.

Figure 1-24 Airflow Direction

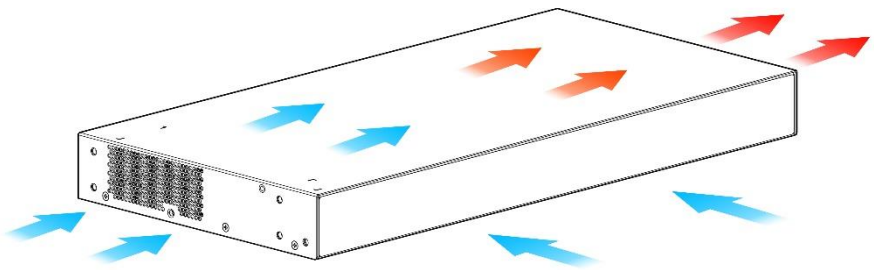

LED

Function	Panel ID	Color	Status
System Status LED	Status	Off	System is not powered on.
		Blinking Green (3 Hz)	System is being initialized. Continuous blinking indicates a fault.
		Blinking Green (10 Hz)	System is being located.
		Solid Green	System is operating normally.
		Solid Yellow	The temperature at the air intake and exhaust vents exceeds the threshold.
		Solid Red	1. The temperature at the air intake and exhaust vents well exceeds the threshold. 2. The system is not functioning properly.
Management Port LED	MGMT	Off	No link is detected for this port.
		Solid Green	The port has made a successful 1000 Mbps link.
		Blinking Green	The port is sending and receiving traffic at 1000 Mbps.
		Solid Yellow	The port has made a successful 10/100 Mbps link.
		Blinking Yellow	The port is sending and receiving traffic at 10/100 Mbps.
10GE SFP+ Port LED	49F to 52F	Off	No link is detected for this port.
		Solid Green	The port has made a successful 1/10 Gbps link.
		Blinking Green	The port is sending and receiving traffic at 1/10 Gbps.

10/100/1000Base-T Ethernet Port LED	1F to 48F	Off	No link is detected for this port.
		Solid Green	The port has made a successful 10/100/1000 Mbps link.
		Blinking Green	The port is sending and receiving traffic at 10/100/1000 Mbps.

1.7 RG-S5310-24GT4XS-P-E

Specifications

Model	RG-S5310-24GT4XS-P-E
CPU	Dual-core CPU with the clock speed of 1.2 GHz
BOOTROM	16 MB
Flash Memory	2 GB
SDRAM	1 GB
SFP Module Type	● SFP+ Port: ● SFP Modules and SFP BIDI Modules ● SFP+ Modules, SFP+ Cables and SFP+ BIDI Modules. ● See Chapter 7 for details. The module types may update without prior notification. Please contact Ruijie Networks for details.
Power Supply Module Slots	2
Power Supply Module	● RG-PA600I-P-F AC Input Rated Voltage Range: 200 V AC to 240 V AC Maximum Voltage Range: 176 V AC to 264 V AC Frequency: 50 Hz/60 Hz Rated Current Per Circuit: 8 A ● RG-PD600I-P-F DC Input Rated Voltage Range: -48 V DC to -60 V DC Maximum Voltage Range: -38 V DC to -75 V DC Rated Current Per Circuit: 20 A ● RG-PA1000I-P-F AC Input Rated Voltage Range: 200 V AC to 240 V AC Maximum Voltage Range: 176 V AC to 264 V AC Frequency: 50 Hz/60 Hz Rated Current Per Circuit: 8 A

SFP+ Port	10GBase-R Capable 1000Base-X Capable
RTC	Supported
PoE	All RJ45 ports are PoE+ capable and each port provides up to 30 W of power. The maximum power depends on the configured power supply. The PoE+ port is compliant with both the PoE (IEEE802.3af) and PoE+ (IEEE802.3at) standards. The maximum number of PoE devices supported by the switch is determined by the available PoE consumption of the switch and the actual PoE consumption of each device. The PoE port is compliant with Alternative A.
Power Consumption	Without PoE Load: < 65 W With PoE Full Load: < 810 W
Operating Temperature	0ºC to 45ºC (32ºF to 113 ºF) at a height below 1800 m (1.12 miles) above the sea level At a height ranging from 1800 m (1.12 miles) to 5000 m (3.11 miles) above the sea level, the maximum operating temperature decreases by 1°C (1.8°F) every time the altitude increases by 220 m (721.78 ft.).
Storage Temperature	-40ºC to 70ºC (-40ºF to 158ºF)
Operating Humidity	10% to 90% RH (non-condensing)
Operating Height	0 to 5000 m (3.11 miles) above the sea level
Operating Humidity	5% to 95% RH (non-condensing)
Fan	Fan Speed Control Fan Fault Alarming
Temperature Alarming	Supported
EMI Certification	GB9254-2008CLASS A
Safety Regulation Compliance	GB4943-2011
Dimensions (W x D x H)	442 mm x 420 mm x 43.6 mm (17.40 in. x 16.54 in. x 1.72 in.)
Weight	4.3 kg (9.48 lbs.)

Appearance

The front panel of the RG-S5310-24GT4XS-P-E switch provides 24 10/100/1000Base-T Ethernet ports (PoE+ capable), four 10GE SFP+ ports, one management port, one Console port and one USB port. The back panel has two power supply module slots.

Figure 1-25 RG-S5310-24GT4XS-P-E Switch Appearance

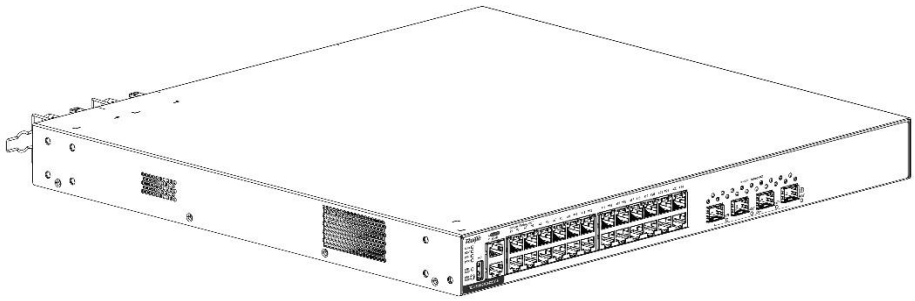

Front Panel

Figure 1-26 Front Panel of RG-S5310-24GT4XS-P-E

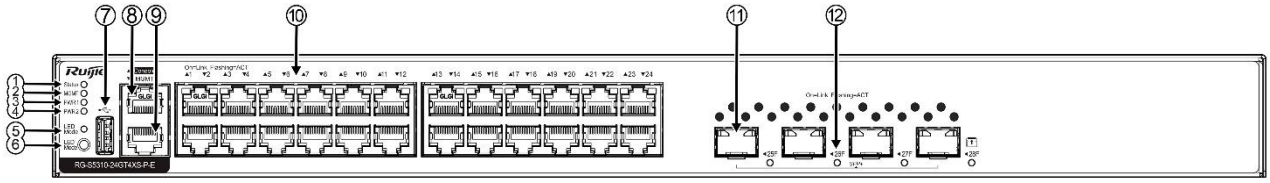

1. System Status LED	7. USB Port
2. Management Port LED	8. Console Port
3. PWR1 Status LED	9. Management Port
4. PWR2 Status LED	10. 10/100/1000Base-T Ethernet Port
5. LED Mode Indicator	11. 10GE SFP+ Port
6. LED Mode Button	12. Port LED

Back Panel

Figure 1-27 Back Panel of RG-S5310-24GT4XS-P-E

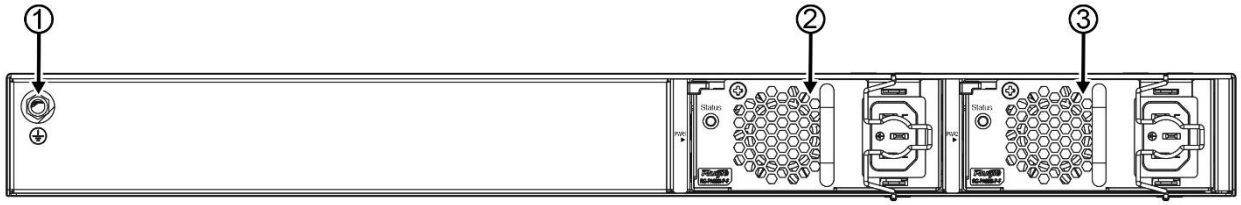

1. Grounding Stud
2. Power Supply Module Slot 1 (A filler panel is required if the slot is vacant.)
3. Power Supply Module Slot 2 (A filler panel is required if the slot is vacant.)

Power Supply

The RG-S5310-24GT4XS-P-E switch supports dual power supply modules. See Chapter 1.13 for details about the power supply modules.

The switch can be powered on by either one power supply module or dual power supply modules. If both power supply modules are used, the switch works in the power redundancy mode.

Cooling

The RG-S5310-24GT4XS-P-E switch adopts a left-to-right and front-to-right airflow to ensure normal operation. Maintain a minimum clearance of 100 mm (3.94 in.) around the device for air circulation.

Figure 1-28 Airflow Direction

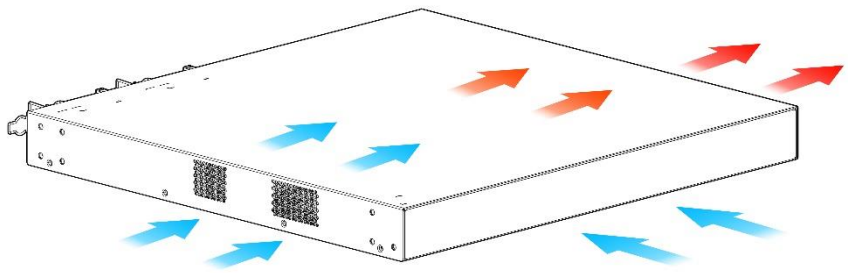

LED

Function	Panel ID	Color	Status
System Status LED	Status	Off	System is not powered on.
		Blinking Green (3 Hz)	System is being initialized. Continuous blinking indicates a fault.
		Blinking Green (10 Hz)	System is being located.
		Solid Green	System is operating normally.
		Solid Yellow	The temperature at the air intake and exhaust vents exceeds the threshold.
		Solid Red	1. The temperature at the air intake and exhaust vents well exceeds the threshold. 2. The system is not functioning properly.
Power Supply Status LED	PWR1/PWR2	Off	The power supply module is not seated.
		Solid Green	The power supply module is seated and providing power to the switch.
		Solid Yellow	The model of the power supply module is not supported or cannot be identified.
		Solid Red	The redundant power supply module is not functioning properly or not connected with the AC power cord.
Management Port LED	MGMT	Off	No link is detected for this port.
		Solid Green	The port has made a successful 1000 Mbps link.
		Blinking Green	The port is sending and receiving traffic at 1000 Mbps.
		Solid Yellow	The port has made a successful 10/100 Mbps link.
		Blinking Yellow	The port is sending and receiving traffic at 10/100 Mbps.
LED Mode Indicator	LED Mode	Solid Green	Switching status
		Solid Yellow	PoE status

10GE SFP+ Port LED	25F to 28F	Off	No link is detected for this port.
		Solid Green	The port has made a successful 1/10 Gbps link.
		Blinking Green	The port is sending and receiving traffic at 1/10 Gbps.
10/100/1000Base-T Ethernet Port LED	1F to 24F	Off	No link is detected for this port.
		Solid Green	The port has made a successful 10/100/1000 Mbps link.
		Blinking Green	The port is sending and receiving traffic at 10/100/1000 Mbps.
PoE Status LED	1F to 24F	Off	PoE is disabled.
		Solid Green	PoE is enabled.
		Blinking Green (3 Hz)	PoE overload occurs.

LED Mode Button

The LED Mode button is used to switch the LED mode. The green LED Mode indicator indicates the switching status. Press the **LED Mode** button, and the LED Mode indicator will turn yellow, indicating the PoE status. Press the **LED Mode** button again, the indicator switches to indicating the switching status.

If you want to switch the LED mode, press the button for over two seconds.

1.8 RG-S5300-24GT2SFP2XS-P-E

Specifications

Model	RG-S5300-24GT2SFP2XS-P-E
CPU	Dual-core CPU with the clock speed of 1.2 GHz
BOOTROM	16 MB
Flash Memory	2 GB
SDRAM	1 GB
SFP Module Type	● SFP Port: ● SFP Modules and SFP BIDI Modules ● SFP+ Port: ● SFP Modules and SFP BIDI Modules ● SFP+ Modules, SFP+ Cables and SFP+ BIDI Modules. ● See Chapter 7 for details. ⚠ The module types may update without prior notification. Please contact Ruijie Networks for details.
Built-in Power Supply	AC Input Rated Voltage Range: 100 V AC to 240 V AC Maximum Voltage Range: 90 V AC to 264 V AC Frequency: 50 Hz/60 Hz Rated Current Per Circuit: 6 A
SFP Port	1000Base-X Capable

SFP+ Port	10GBase-R Capable 1000Base-X Capable
RTC	Supported
PoE	All RJ45 ports are PoE+ capable and each port provides up to 30 W of power. Maximum PoE Output: 370 W The PoE+ port is compliant with both the PoE (IEEE802.3af) and PoE+ (IEEE802.3at) standards. The maximum number of PoE devices supported by the switch is determined by the available PoE consumption of the switch and the actual PoE consumption of each device. The PoE port is compliant with Alternative A.
Power Consumption	Without PoE Load: < 65 W With PoE Full Load: < 410 W
Operating Temperature	0ºC to 45ºC (32ºF to 113 ºF) at a height below 1800 m (1.12 miles) above the sea level At a height ranging from 1800 m (1.12 miles) to 5000 m (3.11 miles) above the sea level, the maximum operating temperature decreases by 1°C (1.8°F) every time the altitude increases by 220 m (721.78 ft.).
Storage Temperature	-40ºC to 70ºC (-40ºF to 158ºF)
Operating Humidity	10% to 90% RH (non-condensing)
Operating Height	0 to 5000 m (3.11 miles) above the sea level
Storage Humidity	5% to 95% RH (non-condensing)
Fan	Fan Speed Control Fan Fault Alarming
Temperature Alarming	Supported
EMI Certification	GB9254-2008CLASS A
Safety Regulation Compliance	GB4943-2011
Dimensions (W x D x H)	442 mm x 220 mm x 43.6 mm (17.40 in. x 8.66 in. x 1.72 in.)
Weight	3 kg (6.61 lbs.)

Appearance

The front panel of the RG-S5300-24GT2SFP2XS-P-E switch provides 24 10/100/1000Base-T Ethernet ports (PoE+ capable), two GE SFP ports, and two 10GE SFP+ ports (The speed is 1000 Mbps by default and can be improved to 10 Gbps if you purchase a license. Without a license, the port can make a successful link only when the peer end speed is 1000 Mpbs. If configured as a VSL port, the port supports a speed of 10 Gbps without the license), one management port, one Console port and one USB port. The back panel has an AC power plug.

Figure 1-29 RG-S5300-24GT2SFP2XS-P-E Switch Appearance

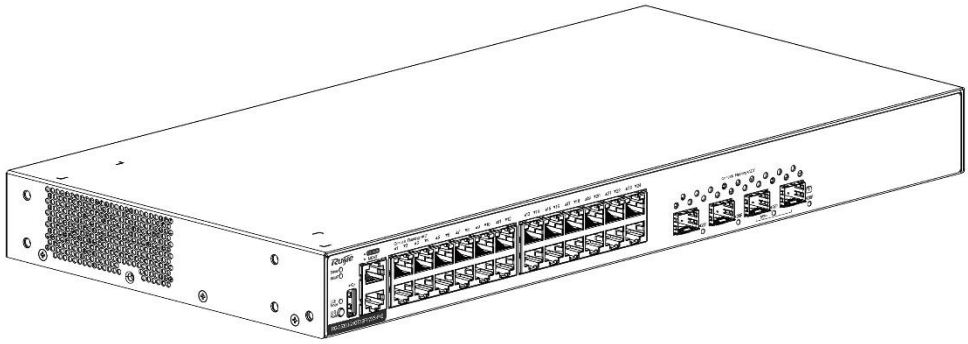

Front Panel

Figure 1-30 Front Panel of RG-S5300-24GT2SFP2XS-P-E

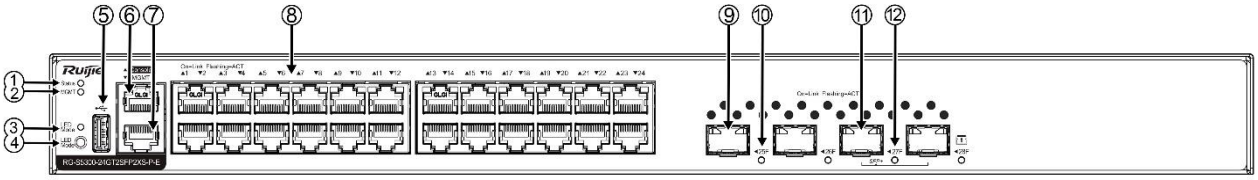

1. System Status LED	7. Management Port
2. Management Port LED	8. 10/100/1000Base-T Ethernet Port
3. LED Mode Indicator	9. GE SFP Port
4. LED Mode Button	10. GE SFP Port LED
5. USB Port	11. 10GE SFP+ Port
6. Console Port	12. 10GE SFP+ Port LED

Back Panel

Figure 1-31 Back Panel of RG-S5300-24GT2SFP2XS-P-E

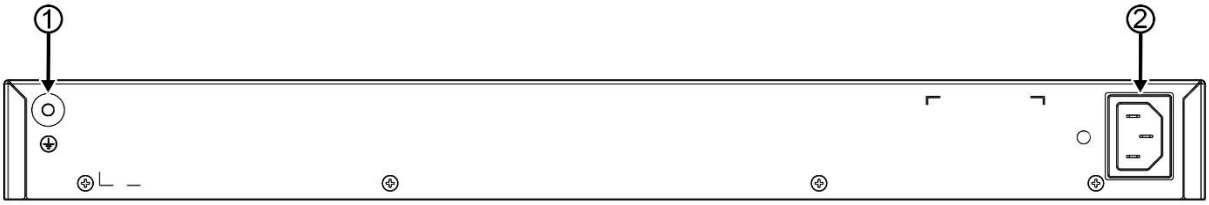

1. Grounding Stud
2. AC Power Plug

Power Supply

The RG-S5300-24GT2SFP2XS-P-E switch has a built-in power supply module. The back panel has an AC power plug.

Cooling

The RG-S5300-24GT2SFP2XS-P-E switch adopts a left-to-right and front-to-right airflow to ensure normal operation. Maintain a minimum clearance of 100 mm (3.94 in.) around the device for air circulation.

Figure 1-32 Airflow Direction

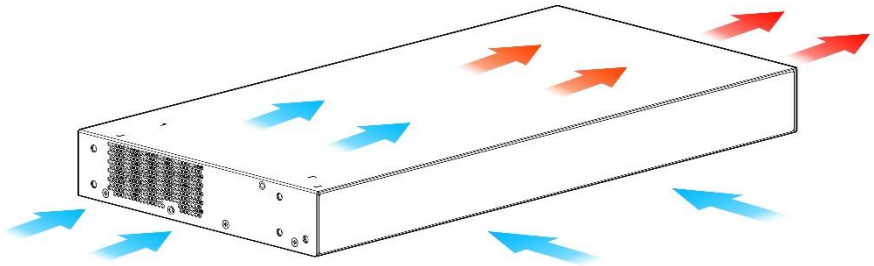

LED

Function	Panel ID	Color	Status
System Status LED	Status	Off	System is not powered on.
		Blinking Green (3 Hz)	System is being initialized. Continuous blinking indicates a fault.
		Blinking Green (10 Hz)	System is being located.
		Solid Green	System is operating normally.
		Solid Yellow	The temperature at the air intake and exhaust vents exceeds the threshold.
		Solid Red	1. The temperature at the air intake and exhaust vents well exceeds the threshold. 2. The system is not functioning properly.
Management Port LED	MGMT	Off	No link is detected for this port.
		Solid Green	The port has made a successful 1000 Mbps link.
		Blinking Green	The port is sending and receiving traffic at 1000 Mbps.
		Solid Yellow	The port has made a successful 10/100 Mbps link.
		Blinking Yellow	The port is sending and receiving traffic at 10/100 Mbps.
LED Mode Indicator	LED Mode	Solid Green	Switching status
		Solid Yellow	PoE status
10GE SFP+ Port LED	27F to 28F	Off	No link is detected for this port.
		Solid Green	The port has made a successful 1/10 Gbps link.
		Blinking Green	The port is sending and receiving traffic at 1/10 Gbps.
GE SFP Port LED	25F to 26F	Off	No link is detected for this port.
		Solid Green	The port has made a successful 1000 Mbps link.
		Blinking Green	The port is sending and receiving traffic at 1000 Mbps.
10/100/1000Base-T Ethernet Port LED	1F to 24F	Off	No link is detected for this port.
		Solid Green	The port has made a successful 10/100/1000 Mbps link.
		Blinking Green	The port is sending and receiving traffic at 10/100/1000 Mbps.
PoE Status LED	1F to 24F	Off	PoE is disabled.

		Solid Green	PoE is enabled.
		Blinking Green (3 Hz)	PoE overload occurs.

LED Mode Button

The **LED Mode** button is used to switch the LED mode. The green LED Mode indicator indicates the switching status. Press the **LED Mode** button, and the LED Mode indicator will turn yellow, indicating the PoE status. Press the **LED Mode** button again, the indicator switches to indicating the switching status.

If you want to switch the LED mode, press the button for over two seconds.

1.9 RG-S5300-24GT4XS-P-E

Specifications

Model	RG-S5300-24GT4XS-P-E
CPU	Dual-core CPU with the clock speed of 1.2 GHz
BOOTROM	16 MB
Flash Memory	2 GB
SDRAM	1 GB
SFP Module Type	● SFP+ Port: ● SFP Modules and SFP BIDI Modules ● SFP+ Modules, SFP+ Cables and SFP+ BIDI Modules. ● See Chapter 7 for details. The module types may update without prior notification. Please contact Ruijie Networks for details.
Built-in Power Supply	AC Input Rated Voltage Range: 100 V AC to 240 V AC Maximum Voltage Range: 90 V AC to 264 V AC Frequency: 50 Hz/60 Hz Rated Current Per Circuit: 6 A
SFP+ Port	10GBase-R Capable 1000Base-X Capable
RTC	Supported
PoE	All RJ45 ports are PoE+ capable and each port provides up to 30 W of power. Maximum PoE Output: 370 W The PoE+ port is compliant with both the PoE (IEEE802.3af) and PoE+ (IEEE802.3at) standards. The maximum number of PoE devices supported by the switch is determined by the available PoE consumption of the switch and the actual PoE consumption of each device. The PoE port is compliant with Alternative A.
Power Consumption	Without PoE Load: < 65 W

	With PoE Full Load: < 410 W
Operating Temperature	0ºC to 45ºC (32ºF to 113 ºF) at a height below 1800 m (1.12 miles) above the sea level At a height ranging from 1800 m (1.12 miles) to 5000 m (3.11 miles) above the sea level, the maximum operating temperature decreases by 1°C (1.8°F) every time the altitude increases by 220 m (721.78 ft.).
Storage Temperature	-40ºC to 70ºC (-40ºF to 158ºF)
Operating Humidity	10% to 90% RH (non-condensing)
Operating Height	0 to 5000 m (3.11 miles) above the sea level
Storage Humidity	5% to 95% RH (non-condensing)
Fan	Fan Speed Control Fan Fault Alarming
Temperature Alarming	Supported
EMI Certification	GB9254-2008CLASS A
Safety Regulation Compliance	GB4943-2011
Dimensions (W x D x H)	442 mm x 220 mm x 43.6 mm (17.40 in. x 8.66 in. x 1.72 in.)
Weight	3 kg (6.61 lbs.)

Appearance

The front panel of the RG-S5300-24GT4XS-P-E switch provides 24 10/100/1000Base-T Ethernet ports (PoE+ capable), four 10GE SFP+ ports, one management port, one Console port and one USB port. The back panel has an AC power plug.

Figure 1-33 RG-S5300-24GT4XS-P-E Switch Appearance

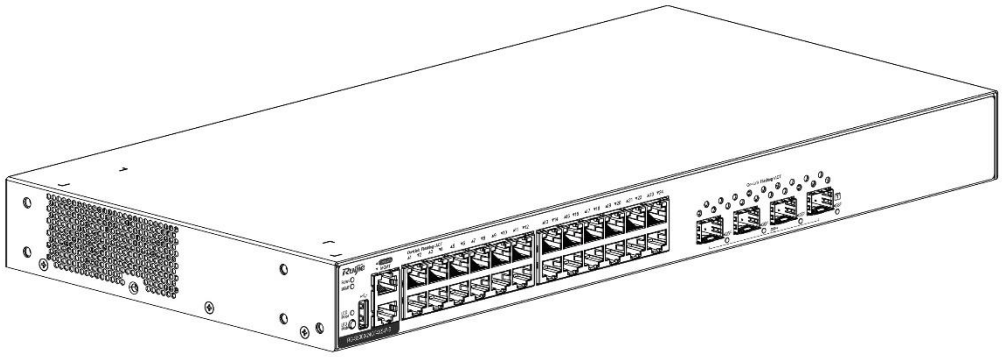

Front Panel

Figure 1-34 Front Panel of RG-S5300-24GT4XS-P-E

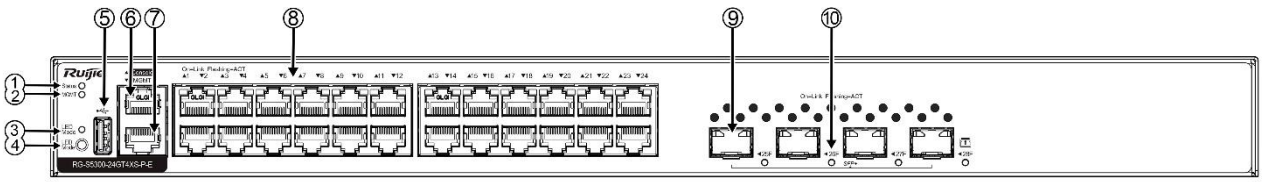

1. System Status LED
2. Management Port LED
3. LED Mode Indicator
4. LED Mode Button
5. USB Port
6. Console Port
7. Management Port
8. 10/100/1000Base-T Ethernet Port
9. 10GE SFP+ Port
10. Port LED

Back Panel

Figure 1-35 Back Panel of RG-S5300-24GT4XS-P-E

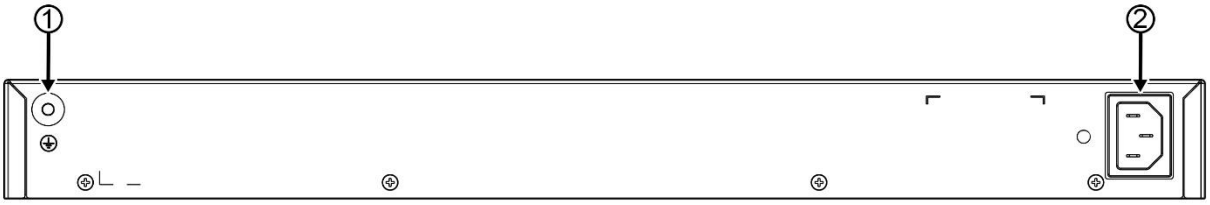

1. Grounding Stud
2. AC Power Plug

Power Supply

The RG-S5300-24GT4XS-P-E switch has a built-in power supply module. The back panel has an AC power plug.

Cooling

The RG-S5300-24GT4XS-P-E switch adopts a left-to-right and front-to-right airflow to ensure normal operation. Maintain a minimum clearance of 100 mm (3.94 in.) around the device for air circulation.

Figure 1-36 Airflow Direction

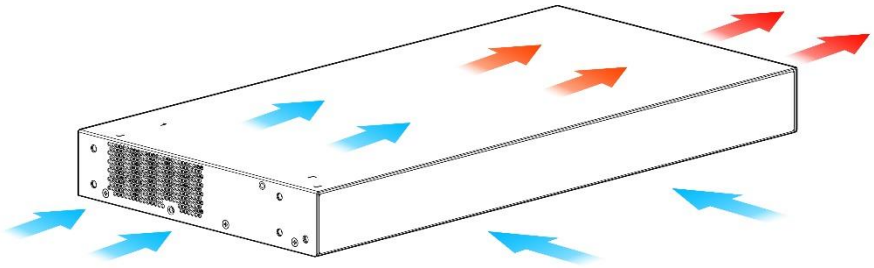

LED

Function	Panel ID	Color	Status
System Status LED	Status	Off	System is not powered on.
		Blinking Green (3 Hz)	System is being initialized. Continuous blinking indicates a fault.
		Blinking Green (10 Hz)	System is being located.

		Solid Green	System is operating normally.
		Solid Yellow	The temperature at the air intake and exhaust vents exceeds the threshold.
		Solid Red	1. The temperature at the air intake and exhaust vents exceeds the threshold greatly. 2. The system is not functioning properly.
Management Port LED	MGMT	Off	No link is detected for this port.
		Solid Green	The port has made a successful 1000 Mbps link.
		Blinking Green	The port is sending and receiving traffic at 1000 Mbps.
		Solid Yellow	The port has made a successful 10/100 Mbps link.
		Blinking Yellow	The port is sending and receiving traffic at 10/100 Mbps.
LED Mode Indicator	LED Mode	Solid Green	Switching status
		Solid Yellow	PoE status
10GE SFP+ Port LED	25F to 28F	Off	No link is detected for this port.
		Solid Green	The port has made a successful 1/10 Gbps link.
		Blinking Green	The port is sending and receiving traffic at 1/10 Gbps.
10/100/1000Base-T Ethernet Port LED	1F to 24F	Off	No link is detected for this port.
		Solid Green	The port has made a successful 10/100/1000 Mbps link.
		Blinking Green	The port is sending and receiving traffic at 10/100/1000 Mbps.
PoE Status LED	1F to 24F	Off	PoE is disabled.
		Solid Green	PoE is enabled.
		Blinking Green (3 Hz)	PoE overload occurs.

LED Mode Button

The **LED Mode** button is used to switch the LED mode. The green LED Mode indicator indicates the switching status. Press the **LED Mode** button, and the LED Mode indicator will turn yellow, indicating the PoE status. Press the **LED Mode** button again, the indicator switches to indicating the switching status.

If you want to switch the LED mode, press the button for over two seconds.

1.10 RG-S5310-48GT4XS-P-E

Specifications

Model	RG-S5310-48GT4XS-P-E
CPU	Dual-core CPU with the clock speed of 1.2 GHz
BOOTROM	16 MB
Flash Memory	2 GB
SDRAM	1 GB
SFP Module Type	● SFP+ Port: ● SFP Modules and SFP BIDI Modules

	● SFP+ Modules, SFP+ Cables and SFP+ BIDI Modules. ● See Chapter 7 for details. The module types may update without prior notification. Please contact Ruijie Networks for details.
Power Supply Module Slots	2
Power Supply Module	● RG-PA600I-P-F AC Input Rated Voltage Range: 200 V AC to 240 V AC Maximum Voltage Range: 176 V AC to 264 V AC Frequency: 50 Hz/60 Hz Rated Current Per Circuit: 8 A ● RG-PD600I-P-F DC Input Rated Voltage Range: -48 V DC to -60 V DC Maximum Voltage Range: -38 V DC to -75 V DC Rated Current Per Circuit: 20 A ● RG-PA1000I-P-F AC Input Rated Voltage Range: 200 V AC to 240 V AC Maximum Voltage Range: 176 V AC to 264 V AC Frequency: 50 Hz/60 Hz Rated Current Per Circuit: 8 A
SFP+ Port	10GBase-R Capable 1000Base-X Capable
RTC	Supported
PoE	All RJ45 ports are PoE+ capable and each port provides up to 30 W of power. The PoE+ port is compliant with both the PoE (IEEE802.3af) and PoE+ (IEEE802.3at) standards. The maximum number of PoE devices supported by the switch is determined by the available PoE consumption of the switch and the actual PoE consumption of each device. The PoE port is compliant with Alternative A.
Power Consumption	Without PoE Load: < 75 W With PoE Full Load: < 1570 W
Operating Temperature	0ºC to 45ºC (32ºF to 113 ºF) at a height below 1800 m (1.12 miles) above the sea level At a height ranging from 1800 m (1.12 miles) to 5000 m (3.11 miles) above the sea level, the maximum operating temperature decreases by 1°C (1.8°F) every time the altitude increases by 220 m (721.78 ft.).
Storage Temperature	-40ºC to 70ºC (-40ºF to 158ºF)
Operating Humidity	10% to 90% RH (non-condensing)

Operating Height	0 to 5000 m (3.11 miles) above the sea level
5% to 90% RH	5% to 95% RH (non-condensing)
Fan	Fan Speed Control Fan Fault Alarming
Temperature Alarming	Supported
EMI Certification	GB9254-2008CLASS A
Safety Regulation Compliance	GB4943-2011
Dimensions (W x D x H)	442 mm x 420 mm x 43.6 mm (17.40 in. x 16.54 in. x 1.72 in.)
Weight	4.6 kg (10.14 lbs.)

Appearance

The front panel of the RG-S5310-48GT4XS-P-E switch provides 48 10/100/1000Base-T Ethernet ports (PoE+ capable), four 10GE SFP+ ports, one management port, one Console port and one USB port. The back panel has two power supply module slots.

Figure 1-37RG-S5310-48GT4XS-P-E Switch Appearance

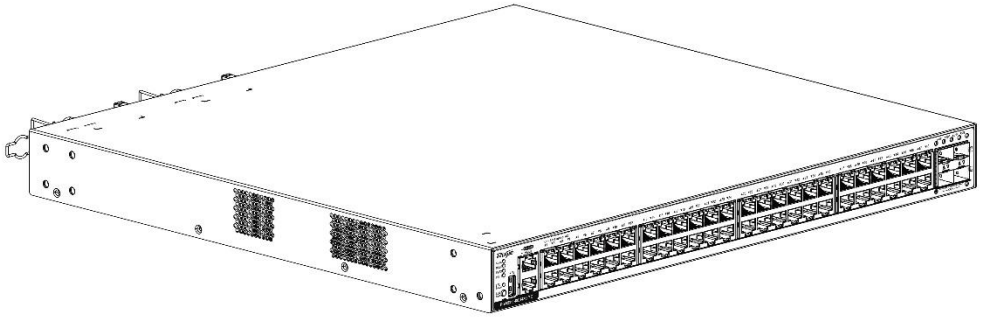

Front Panel

Figure 1-38 Front Panel of RG-S5310-48GT4XS-P-E

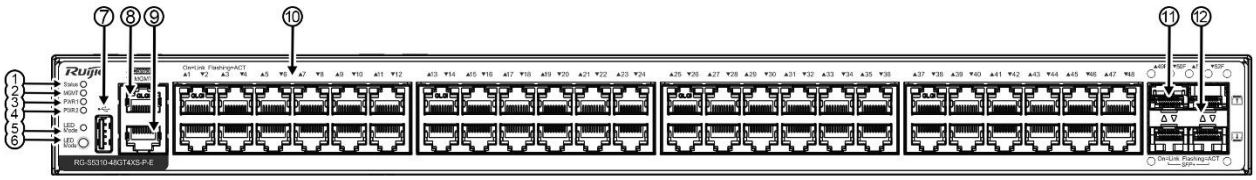

1. System Status LED	7. USB Port
2. Management Port LED	8. Console Port
3. PWR1 Status LED	9. Management Port
4. PWR2 Status LED	10. 10/100/1000Base-T Ethernet Port
5. LED Mode Indicator	11. 10GE SFP+ Port
6. LED Mode Button	12. Port LED

Back Panel

Figure 1-39 Back Panel of RG-S5310-48GT4XS-P-E

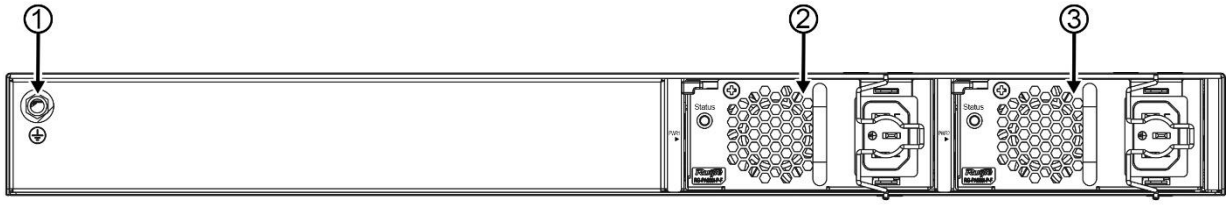

1. Grounding Stud
2. Power Supply Module Slot 1 (A filler panel is required if the slot is vacant.)
3. Power Supply Module Slot 2 (A filler panel is required if the slot is vacant.)

Power Supply

The RG-S5310-48GT4XS-P-E switch supports dual power supply modules. See Chapter 1.13 for details about the power supply modules.

The switch can be powered on by either one power supply module or dual power supply modules. If both power supply modules are used, the switch works in the power redundancy mode.

Cooling

The RG-S5310-48GT4XS-P-E switch adopts a left-to-right and front-to-right airflow to ensure normal operation. Maintain a minimum clearance of 100 mm (3.94 in.) around the device for air circulation.

Figure 1-40 Airflow Direction

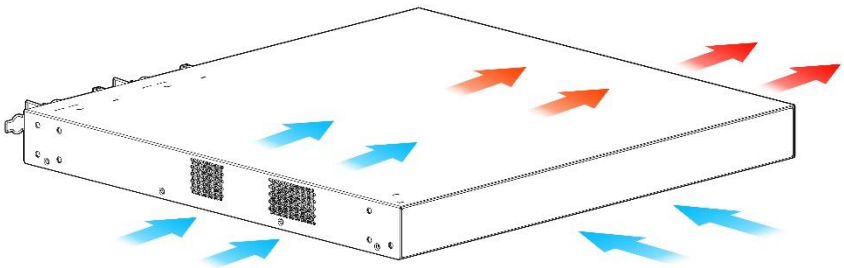

LED

Function	Panel ID	Color	Status
System Status LED	Status	Off	System is not powered on.
		Blinking Green (3 Hz)	System is being initialized. Continuous blinking indicates a fault.
		Blinking Green (10 Hz)	System is being located.
		Solid Green	System is operating normally.

		Solid Yellow	The temperature at the air intake and exhaust vents exceeds the threshold.
		Solid Red	1. The temperature at the air intake and exhaust vents exceeds the threshold greatly. 2. The system is not functioning properly.
Power Supply Status LED	PWR1/PWR2	Off	The power supply module is not seated.
		Solid Green	The power supply module is seated and providing power to the switch.
		Solid Yellow	The model of the power supply module is not supported or cannot be identified.
		Solid Red	The redundant power supply module is not functioning properly or not connected with the AC power cord.
Management Port LED	MGMT	Off	No link is detected for this port.
		Solid Green	The port has made a successful 1000 Mbps link.
		Blinking Green	The port is sending and receiving traffic at 1000 Mbps.
		Solid Yellow	The port has made a successful 10/100 Mbps link.
		Blinking Yellow	The port is sending and receiving traffic at 10/100 Mbps.
LED Mode Indicator	LED Mode	Solid Green	Switching status
		Solid Yellow	PoE status
10GE SFP+ Port LED	49F to 52F	Off	No link is detected for this port.
		Solid Green	The port has made a successful 1/10 Gbps link.
		Blinking Green	The port is sending and receiving traffic at 1/10 Gbps.
10/100/1000Base-T Ethernet Port LED	1F to 48F	Off	No link is detected for this port.
		Solid Green	The port has made a successful 10/100/1000 Mbps link.
		Blinking Green	The port is sending and receiving traffic at 10/100/1000 Mbps.
PoE Status LED	1F to 48F	Off	PoE is disabled.
		Solid Green	PoE is enabled.
		Blinking Green (3 Hz)	PoE overload occurs.

LED Mode Button

The **LED Mode** button is used to switch the LED mode. The green LED Mode indicator indicates the switching status. Press the **LED Mode** button, and the LED Mode indicator will turn yellow, indicating the PoE status. Press the LED Mode button again, the indicator switches to indicating the switching status.

If you want to switch the LED mode, press the button for over two seconds.

1.11 RG-S5310-24SFP4XS-E

Specifications

Model	RG-S5310-24SFP4XS-E
CPU	Dual-core CPU with the clock speed of 1.2 GHz
BOOTROM	16 MB
Flash Memory	2 GB
SDRAM	1 GB
SFP Module Type	● SFP Port: ● SFP Modules and SFP BIDI Modules ● SFP+ Port: ● SFP Modules and SFP BIDI Modules ● SFP+ Modules, SFP+ Cables and SFP+ BIDI Modules. ● See Chapter 7 for details. The module types may update without prior notification. Please contact Ruijie Networks for details.
Power Supply Module Slots	2
Power Supply Module	● RG-PA70IB AC Input Rated Voltage Range: 100 V AC to 240 V AC Maximum Voltage Range: 90 V AC to 264 V AC Frequency: 50 Hz/60 Hz Rated Current Per Circuit: 2 A ● RG-PA150IB-F AC Input Rated Voltage Range: 100 V AC to 240 V AC Maximum Voltage Range: 90 V AC to 264 V AC Frequency: 50 Hz/60 Hz Rated Current Per Circuit: 3 A ● RG-PD150IB-F DC Input Rated Voltage Range: -48 V DC to -60 V DC Maximum Voltage Range: -36 V DC to -75 V DC Rated Current Per Circuit: 5 A
SFP Port	1000Base-X Capable 100Base-X Capable
SFP+ Port	10GBase-R Capable

	1000Base-X Capable
RTC	supported
PoE	Not supported
Power Consumption	< 85 W
Operating Temperature	0ºC to 45ºC (32ºF to 113 ºF) at a height below 1800 m (1.12 miles) above the sea level At a height ranging from 1800 m (1.12 miles) to 5000 m (3.11 miles) above the sea level, the maximum operating temperature decreases by 1°C (1.8°F) every time the altitude increases by 220 m (721.78 ft.).
Storage Temperature	-40ºC to 70ºC (-40ºF to 158ºF)
Operating Humidity	10% to 90% RH (non-condensing)
Operating Height	0 to 5000 m (3.11 miles) above the sea level
Storage Humidity	5% to 95% RH (non-condensing)
Fan	Fan Speed Control Fan Fault Alarming
Temperature Alarming	Supported
EMI Certification	GB9254-2008CLASS A
Safety Regulation Compliance	GB4943-2011
Dimensions (W x D x H)	442 mm x 420 mm x 43.6 mm (17.40 in. x 16.54 in. x 1.72 in.)
Weight	4.2 kg (9.26 lbs.)

Appearance

The front panel of the RG-S5310-24SFP4XS-E switch provides 24 GE SFP ports, four 10GE SFP+ ports, one management port, one Console port and one USB port. The back panel has two power supply module slots.

Figure 1-41 RG-S5310-24SFP4XS-E Switch Appearance

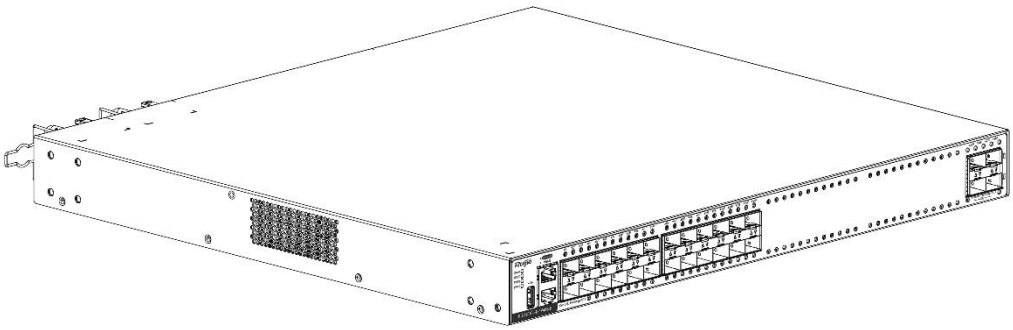

Front Panel

Figure 1-42 Front Panel of RG-S5310-24SFP4XS-E

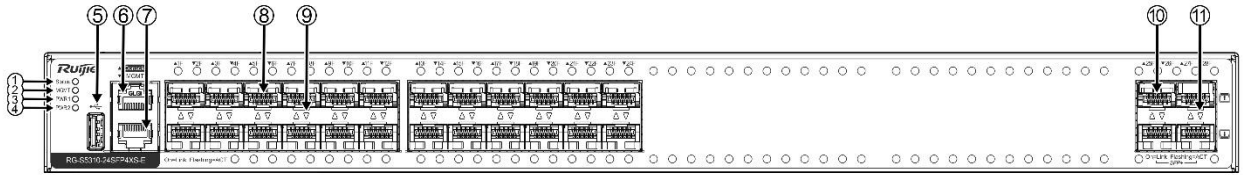

1. System Status LED	7. Management Port
2. Management Port LED	8. GE SFP Port
3. PWR1 Status LED	9. GE SFP Port LED
4. PWR2 Status LED	10. 10GE SFP+ Port
5. USB Port	11. 10GE SFP+ Port LED
6. Console Port	

Back Panel

Figure 1-43 Back Panel of RG-S5310-24SFP4XS-E

1. Grounding Stud
2. Power Supply Module Slot 1 (A filler panel is required if the slot is vacant.)
3. Power Supply Module Slot 2 (A filler panel is required if the slot is vacant.)

Power Supply

The RG-S5310-24SFP4XS-E switch supports dual power supply modules. See Chapter 1.13 for details about the power supply modules.

The switch can be powered on by either one power supply module or dual power supply modules. If both power supply modules are used, the switch works in the power redundancy mode.

Cooling

The RG-S5310-24SFP4XS-E switch adopts a left-to-right and front-to-right airflow to ensure normal operation. Maintain a minimum clearance of 100 mm (3.94 in.) around the device for air circulation.

Figure 1-44 Airflow Direction

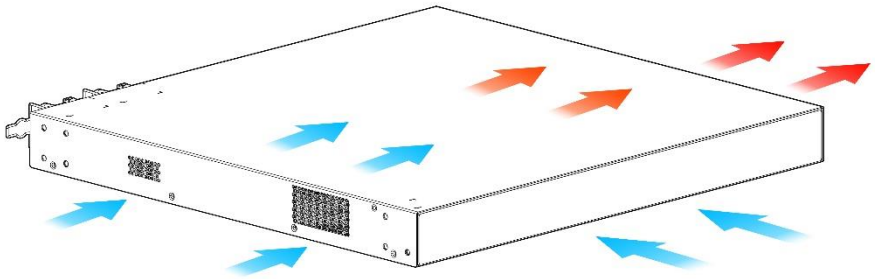

LED

Function	Panel ID	Color	Status
System Status LED	Status	Off	System is not powered on.
		Blinking Green (3 Hz)	System is being initialized. Continuous blinking indicates a fault.
		Blinking Green (10 Hz)	System is being located.
		Solid Green	System is operating normally.
		Solid Yellow	The temperature at the air intake and exhaust vents exceeds the threshold.
		Solid Red	1. The temperature at the air intake and exhaust vents exceeds the threshold greatly. 2. The system is not functioning properly.
Power Supply Status LED	PWR1/PWR2	Off	The power supply module is not seated.
		Solid Green	The power supply module is seated and providing power to the switch.
		Solid Yellow	The model of the power supply module is not supported or cannot be identified.
		Solid Red	The redundant power supply module is not functioning properly or not connected with the AC power cord.
Management Port LED	MGMT	Off	No link is detected for this port.
		Solid Green	The port has made a successful 1000 Mbps link.
		Blinking Green	The port is sending and receiving traffic at 1000 Mbps.
		Solid Yellow	The port has made a successful 10/100 Mbps link.
		Blinking Yellow	The port is sending and receiving traffic at 10/100 Mbps.
10GE SFP+ Port LED	25F to 28F	Off	No link is detected for this port.
		Solid Green	The port has made a successful 1/10 Gbps link.
		Blinking Green	The port is sending and receiving traffic at 1/10 Gbps.
GE SFP Port LED	1F to 24F	Off	No link is detected for this port.
		Solid Green	The port has made a successful 100/1000 Mbps link.
		Blinking Green	The port is sending and receiving traffic at 100/1000 Mbps.

1.12 RG-S5310-48SFP4XS-E

Specifications

Model	RG-S5310-48SFP4XS-E
CPU	Dual-core CPU with the clock speed of 1.2 GHz
BOOTROM	16 MB
Flash Memory	2 GB
SDRAM	1 GB
SFP Module Type	● SFP Port: ● SFP Modules and SFP BIDI Modules ● SFP+ Port: ● SFP Modules, SFP BIDI Modules ● SFP+ Modules, SFP+ Cables and SFP+ BIDI Modules. See Chapter 7 for details. The module types may update without prior notification. Please contact Ruijie Networks for details.
Power Supply Module Slots	2
Power Supply Module	● RG-PA150IB-F AC Input Rated Voltage Range: 100 V AC to 240 V AC Maximum Voltage Range: 90 V AC to 264 V AC Frequency: 50 Hz/60 Hz Rated Current Per Circuit: 3 A ● RG-PD150IB-F DC Input Rated Voltage Range: -48 V DC to -60 V DC Maximum Voltage Range: -36 V DC to -75 V DC Rated Current Per Circuit: 5 A
SFP Port	1000Base-X Capable 100Base-X Capable
SFP+ Port	10GBase-R Capable 1000Base-X Capable
RTC	Supported
PoE	Not Supported
Power Consumption	< 108 W
Operating Temperature	0ºC to 45ºC (32ºF to 113 ºF) at a height below 1800 m (1.12 miles) above the sea level At a height ranging from 1800 m (1.12 miles) to 5000 m (3.11 miles) above the sea level, the maximum operating temperature decreases by 1°C (1.8°F) every time the altitude increases by 220 m (721.78 ft.).

Storage Temperature	-40ºC to 70ºC (-40ºF to 158ºF)
Operating Humidity	10% to 90% RH (non-condensing)
Operating Height	0 to 5000 m (3.11 miles) above the sea level
Storage Humidity	5% to 95% RH (non-condensing)
Fan	Fan Speed Control Fan Fault Alarming
Temperature Alarming	Supported
EMI Certification	GB9254-2008CLASS A
Safety Regulation Compliance	GB4943-2011
Dimensions (W x D x H)	442 mm x 420 mm x 43.6 mm (17.40 in. x 16.54 in. x 1.72 in.)
Weight	4.5 kg (9.92 lbs.)

Appearance

The front panel of the RG-S5310-48SFP4XS-E switch provides 48 GE SFP ports, four 10GE SFP+ ports, one management port, one Console port and one USB port. The back panel has two power supply module slots.

Figure 1-45RG-S5310-48SFP4XS-E Switch Appearance

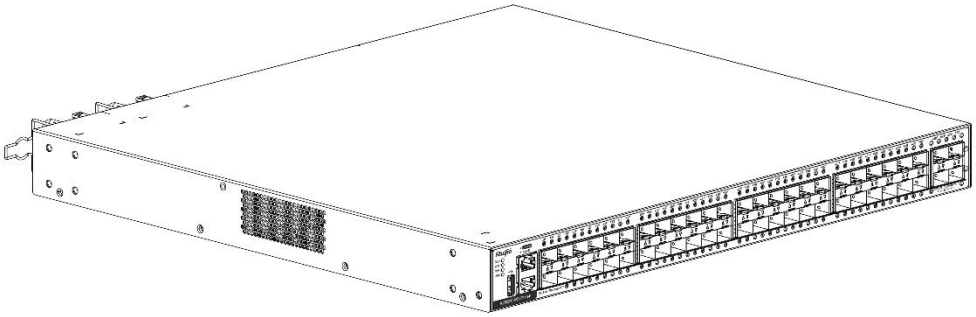

Front Panel

Figure 1-46 Front Panel of RG-S5310-48SFP4XS-E

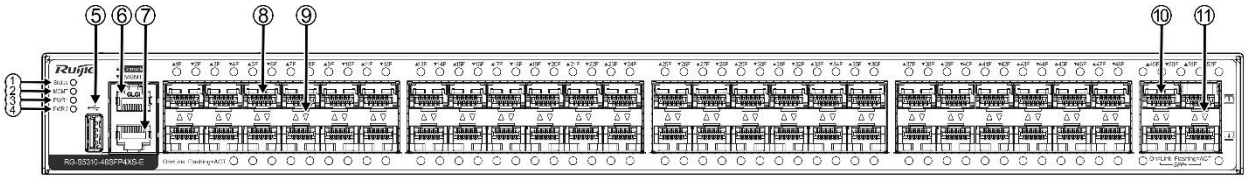

1. System Status LED	7. Management Port
2. Management Port LED	8. GE SFP Port
3. PWR1 Status LED	9. GE SFP Port LED
4. PWR2 Status LED	10. 10GE SFP+ Port
5. USB Port	11. 10GE SFP+ Port LED
6. Console Port	

Back Panel

Figure 1-47 Back Panel of RG-S5310-48SFP4XS-E

1. Grounding Stud
2. Power Supply Module Slot 1 (A filler panel is required if the slot is vacant.)
3. Power Supply Module Slot 2 (A filler panel is required if the slot is vacant.)

Power Supply

The RG-S5310-48SFP4XS-E switch supports dual power supply modules. See Chapter 1.13 for details about the power supply modules.

The switch can be powered on by either one power supply module or dual power supply modules. If both power supply modules are used, the switch works in the power redundancy mode.

Cooling

The RG-S5310-48SFP4XS-E switch adopts a left-to-right and front-to-right airflow to ensure normal operation. Maintain a minimum clearance of 100 mm (3.94 in.) around the device for air circulation.

Figure 1-48 Airflow Direction

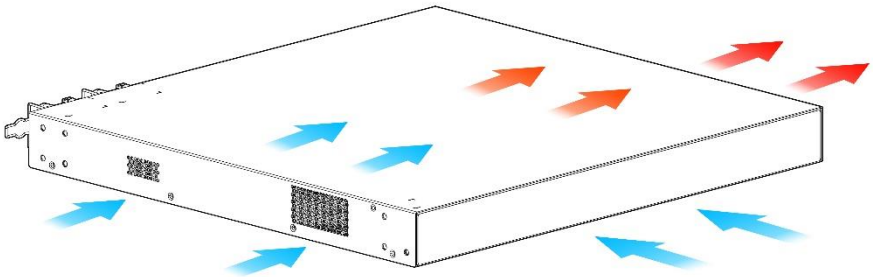

LED

Function	Panel ID	Color	Status
System Status LED	Status	Off	System is not powered on.
		Blinking Green (3 Hz)	System is being initialized. Continuous blinking indicates a fault.
		Blinking Green (10 Hz)	System is being located.
		Solid Green	System is operating normally.

		Solid Yellow	The temperature at the air intake and exhaust vents exceeds the threshold.
		Solid Red	1. The temperature at the air intake and exhaust vents exceeds the threshold greatly. 2. The system is not functioning properly.
Power Supply Status LED	PWR1/PWR2	Off	The power supply module is not seated.
		Solid Green	The power supply module is seated and providing power to the switch.
		Solid Yellow	The model of the power supply module is not supported or cannot be identified.
		Solid Red	The redundant power supply module is not functioning properly or not connected with the AC power cord.
Management Port LED	MGMT	Off	No link is detected for this port.
		Solid Green	The port has made a successful 1000 Mbps link.
		Blinking Green	The port is sending and receiving traffic at 1000 Mbps.
		Solid Yellow	The port has made a successful 10/100 Mbps link.
		Blinking Yellow	The port is sending and receiving traffic at 10/100 Mbps.
10GE SFP+ Port LED	49F to 52F	Off	No link is detected for this port.
		Solid Green	The port has made a successful 1/10 Gbps link.
		Blinking Green	The port is sending and receiving traffic at 1/10 Gbps.
GE SFP Port LED	1F to 48F	Off	No link is detected for this port.
		Solid Green	The port has made a successful 100/1000 Mbps link.
		Blinking Green	The port is sending and receiving traffic at 100/1000 Mbps.

1.13 Power Supply Module

1.13.1 RG-PA70IB Module

The RG-S5310-24GT4XS-E, RG-S5310-48GT4XS-E and RG-S5310-24SFP4XS-E switches support the RG-PA70IB swappable power module. The RG-PA70IB is an AC module (AC/HVDC input and DC output) providing an output voltage of 12 V and an output power of up to 70 W.

The switch can be powered on by either one power supply module or dual power supply modules. If both power supply modules are used, the switch works in the power redundancy mode.

At least one power supply module is required. If any slot is unoccupied, install a filler panel to enable proper airflow.

Specifications

Item	Specification
Power Supply Model	RG-PA70IB
Switch Model	RG-S5310-24GT4XS-E, RG-S5310-48GT4XS-E, RG-S5310-24SFP4XS-E
Rated Input Voltage Range	AC Input: 100 V AC to 240 V AC, 50 Hz/60 Hz

	HVDC Input: 240 V DC
Maximum Input Voltage Range	AC Input: 90 V AC to 264 V AC, 47 Hz/63 Hz HVDC Input: 192 VDC to 288 VDC
Maximum Input Current	2 A
Output Voltage	12 V
Maximum Output Current	5.83 A
Maximum Output Power	70 W
Ground Leakage Current	≤ 3.5 mA
Dimensions (W x D x H)	196 mm x 50.5 mm x 40 mm (7.72 in. x 1.99 in. x 1.57 in.)
Weight	0.4 kg (0.88 lbs.)
Operating Temperature	-10°C to 55°C (14°F to 131°F)
Storage Temperature	-40°C to 70°C (-40°F to 158°F)
Relative Operating Humidity	5% to 95% RH (non-condensing)
Relative Storage Humidity	5% to 95% RH (non-condensing)
Operating Height	0 to 5000 m (3.11 miles) above the sea level

Features

Feature	Benefit
Conformal Coating	Moisture-proof, salt spray-proof, mold-proof, insulation-proof and leak-proof.
Protection	Undervoltage protection, output overcurrent protection, output overvoltage protection and output short circuit protection.
I2C Communication	The switch can communicate with the power supply module through I2C.
Power Redundancy	System supports 1+1 power redundancy. Dual power supply modules are connected in parallel for current sharing.
Hot Swapping	In the power redundancy mode, the power supply module can be replaced when the system is powered on.
Alarming	When a power fault occurs, the output status LED turns off.

LED

Function	Color	Status
Output Status LED	Off	The power supply module is not outputing power properly.
	Solid Green	The power supply module is outputing power normally.

1.13.2 RG-PA150IB-F Module

The RG-S5310-24GT4XS-E, RG-S5310-48GT4XS-E, RG-S5310-24SFP4XS-E and RG-S5310-48SFP4XS-E switches support the RG-PA150IB-F power module. The RG-PA150IB-F is an AC module (AC/HVDC input and DC output) providing an output voltage of 12 V and an output power of up to 150 W.

The switch can be powered on by either one power supply module or dual power supply modules. If both power supply modules are used, the switch works in the power redundancy mode.

At least one power supply module is required. If any slot is unoccupied, install a filler panel to enable proper airflow.

Specifications

Item	Specification
Power Supply Model	RG-PA150IB-F
Switch Model	RG-S5310-48SFP4XS-E
Rated Input Voltage Range	AC Input: 100 V AC to 240 V AC, 50 Hz/60 Hz HVDC Input: 240 V DC
Maximum Input Voltage Range	AC Input: 90 V AC to 264 V AC, 47 Hz/63 Hz HVDC Input: 192 V DC to 288 V DC
Maximum Input Current	3 A
Output Voltage	12 V
Maximum Output Current	12.5 A
Maximum Output Power	150 W
Ground Leakage Current	≤ 3.5 mA
Dimensions (W x D x H)	196 mm x 50.5 mm x 40 mm (7.72 in. x 1.99 in. x 1.57 in.)
Weight	0.55 kg (1.21 lbs.)
Operating Temperature	-10°C to 55°C (14°F to 131°F)
Storage Temperature	-40°C to 70°C (-40°F to 158°F)
Relative Operating Humidity	5% to 95% RH (non-condensing)
Relative Storage Humidity	5% to 95% RH (non-condensing)
Operating Height	0 to 5000 m (3.11 miles) above the sea level

Features

Features	Benefit
Conformal Coating	Moisture-proof, salt spray-proof, mold-proof, insulation-proof and leak-proof.
Protection	Undervoltage protection, output overcurrent protection, output overvoltage protection and output short circuit protection.
I2C Communication	The switch can communicate with the power supply module through I2C.
Power Redundancy	System supports 1+1 power redundancy. Dual power supply modules are connected in parallel for current sharing.
Hot Swapping	In the power redundancy mode, the power supply module can be replaced when the system is powered on.
Alarming	When a power fault occurs, the output status LED turns off.

LED

Function	Color	Status
Output Status LED	Off	The power supply module is not outputing power properly.
	Solid Green	The power supply module is outputing power normally.

1.13.3 RG-PD150IB-F Module

The RG-S5310-24GT4XS-E, RG-S5310-48GT4XS-E, RG-S5310-24SFP4XS-E and RG-S5310-48SFP4XS-E switches support the RG-PD150IB-F power module. The RG-PD150IB-F is a DC module (DC input and DC output) providing an output voltage of 12 V and an output power of up to 150 W.

The switch can be powered on by either one power supply module or dual power supply modules. If both power supply modules are used, the switch works in the power redundancy mode.

At least one power supply module is required. If any slot is unoccupied, install a filler panel to enable proper airflow.

Specifications

Item	Specification
Power Supply Model	RG-PD150IB-F
Switch Model	RG-S5310-24GT4XS-E, RG-S5310-48GT4XS-E, RG-S5310-24SFP4XS-E, RG-S5310-48SFP4XS-E
Rated Input Voltage Range	DC Input: -48 V DC to -60 V DC
Maximum Input Voltage Range	DC Input: -36 V DC to -75 V DC
Maximum Input Current	5 A
Output Voltage	12 V
Maximum Output Current	12.5 A
Maximum Power Output	150 W
Dimensions (W x D x H)	196 mm x 50.5 mm x 40 mm (7.72 in. x 1.99 in. x 1.57 in.)
Weight	0.5 kg (1.10 lbs.)
Operating Temperature	-10°C to 55°C (14°F to 131°F)
Storage Temperature	-40°C to 70°C (-40°F to 158°F)
Relative Operating Humidity	5% to 95% RH (non-condensing)
Relative Storage Humidity	5% to 95% RH (non-condensing)
Operating Height	0 to 5000 m (3.11 miles) above the sea level

Features

Features	Benefit
Conformal Coating	Moisture-proof, salt spray-proof, mold-proof, insulation-proof and leak-proof
Protection	Undervoltage protection, output overcurrent protection, output overvoltage protection and output short circuit protection
I2C Communication	The switch can communicate with the power supply module through I2C.
Power Redundancy	System supports 1+1 power redundancy. Dual power supply modules are connected in parallel for current sharing.
Hot Swapping	In the power redundancy mode, the power supply module can be replaced when the system is powered on.
Alarming	When a power fault occurs, the output status LED turns off.

LED

Function	Color	Status
Output Status LED	Off	The power supply module is not outputing power properly.
	Solid Green	The power supply module is outputing power normally.

1.13.4 RG-PA600I-P-F Module

The RG-S5310-24GT4XS-P-E and RG-S5310-48GT4XS-P-E switches support the RG-PA600I-P-F power module. The RG-PA600I-P-F is an AC module (AC/HVDC input and DC output) providing an output voltage of 56 V and an output power of up to 600 W (PoE power: 370 W).

The switch can be powered on by either one power supply module or dual power supply modules. If both power supply modules are used, the switch works in the power redundancy mode. The switch supports 1+1 power redundancy when the PoE power consumption is less than 370 W.

At least one power supply module is required. If any slot is unoccupied, install a filler panel to enable proper airflow.

Specifications

Item	Specification
Power Supply Model	RG-PA600I-P-F
Switch Model	RG-S5310-24GT4XS-P-E, RG-S5310-48GT4XS-P-E
Rated Input Voltage Range	AC Input: 100 V AC to 240 V AC,50 Hz/60 Hz HVDC Input: 240 V DC
Maximum Input Voltage Range	AC Input: 90 V AC to 264 V AC, 47 Hz/63 Hz HVDC Input: 192 VDC to 288 VDC
Maximum Input Current	8 A
Output Voltage	56 V
Maximum Output Current	10.72 A
Maximum Output Power	600 W
PoE Power Consumption	370 W (Dual power supply modules: 740 W)
Ground Leakage Current	≤ 3.5 mA
Dimensions (W x D x H)	196 mm x 90 mm x 40 mm (7.72 in. x 3.54 in. x 1.57 in.)
Weight	0.9 kg (1.98 lbs.)
Operating Temperature	-10°C to 55°C (14°F to 131°F)
Storage Temperature	-40°C to +70°C (-40°F to 158°F)
Relative Operating Humidity	5% to 95% RH (non-condensing)
Relative Storage Humidity	5% to 95% RH (non-condensing)
Operating Height	0 to 5000 m (3.11 miles) above the sea level

Features

Features	Benefit
Conformal Coating	Moisture-proof, salt spray-proof, mold-proof, insulation-proof and leak-proof
Protection	Undervoltage protection, output overcurrent protection, output overvoltage protection and output short circuit protection
I2C Communication	The switch can communicate with the power supply module through I2C.
Power Redundancy	System supports 1+1 power redundancy when the power consumption is less than 370 W. Dual power supply modules are connected in parallel for current sharing.
Hot Swapping	In the power redundancy mode, the power supply module can be replaced when the system is powered on.

Alarming	When a power fault occurs, the output status LED turns off.

LED

Function	Color	Status
Output Status LED	Off	The power supply module is not connected with a power cord.
	Solid Red	A power output error occurs, including fan fault, output short-circuit, output overcurrent protection, output overvoltage protection, power supply failure and overheat protection.
	Solid Green	The power supply module is outputing power normally.

1.13.5 RG-PD600I-P-F Module

The RG-S5310-24GT4XS-P-E and RG-S5310-48GT4XS-P-E switches support the RG-PD600I-P-F power module. The RG-PD600I-P-F module is a DC module (DC input and DC output) providing an output voltage of 56 V and an output power of up to 600 W (PoE power: 370 W).

The switch can be powered on by either one power supply module or dual power supply modules. If both power supply modules are used, the switch works in the power redundancy mode. The switch supports 1+1 power redundancy when the PoE power consumption is less than 370 W.

At least one power supply module is required. If any slot is unoccupied, install a filler panel to enable proper airflow.

Specifications

Item	Specification
Power Supply Model	RG-PD600I-P-F
Switch Model	RG-S5310-24GT4XS-P-E, RG-S5310-48GT4XS-P-E
Rated Input Voltage Range	DC Input: -48 V DC to -60 V DC
Maximum Input Voltage Range	DC Input: -38 V DC to -75 V DC
Maximum Input Current	20 A
Output Voltage	56 V
Maximum Output Current	10.72 A
Maximum Output Power	600 W
PoE Power Consumption	370 W (Dual power supply modules: 740 W)
Dimensions (W x D x H)	196 mm x 90 mm x 40 mm (7.72 in. x 3.54 in. x 1.57 in.)
Weight	0.9 kg (1.98 lbs.)
Operating Temperature	-10°C to 55°C (14°F to 131°F)
Storage Temperature	-40°C to 70°C (-40°F to 158°F)
Relative Operating Humidity	5% to 95% RH (non-condensing)
Relative Storage Humidity	5% to 95% RH (non-condensing)
Operating Height	0 to 5000 m (3.11 miles) above the sea level

Features

Features	Benefit
Conformal Coating	Moisture-proof, salt spray-proof, mold-proof, insulation-proof and leak-proof
Protection	Undervoltage protection, output overcurrent protection, output overvoltage protection and output short circuit protection
I2C Communication	The switch can communicate with the power supply module through I2C.
Power Redundancy	System supports 1+1 power redundancy when the PoE power consumption is less than 370 W. Dual power supply modules are connected in parallel for current sharing.
Hot Swapping	In the power redundancy mode, the power supply module can be replaced when the system is powered on.
Alarming	When a power fault occurs, the output status LED turns off.

LED

Item	Color	Status
Output Status LED	Off	The power supply module is not connected with a power cord.
	Solid Red	A power output error occurs, including fan fault, output short-circuit, output overcurrent protection, output overvoltage protection, power supply failure and overheat protection.
	Solid Green	The power supply module is outputing power normally.

1.13.6 RG-PA1000I-P-F Module

The RG-S5310-24GT4XS-P-E and RG-S5310-48GT4XS-P-E switches support the RG-PA1000I-P-F power module. The RG-PA1000I-P-F module is an AC module (AC/HVDC input and DC output) providing an output voltage of 56 V and an output power of up to 1000 W (PoE power: 740 W).

The switch can be powered on by either one power supply module or dual power supply modules. If both power supply modules are used, the switch works in the power redundancy mode. The switch supports 1+1 power redundancy when the PoE power consumption is less than 740 W.

At least one power supply module is required. If any slot is unoccupied, install a filler panel to enable proper airflow.

Specifications

Item	Specification
Power Supply Model	RG-PA1000I-P-F
Switch Model	RG-S5310-24GT4XS-P-E, RG-S5310-48GT4XS-P-E
Rated Input Voltage Range	AC Input: 100 V AC to 240 V AC, 50 Hz/60 Hz HVDC Input: 240 V DC
Maximum Input Voltage Range	AC Input: 90 V AC to 264 V AC, 47 Hz/63 Hz HVDC Input: 192 VDC to 288 VDC
Maximum Input Current	12 A (Input Voltage: 100 V AC) 8 A (Input Voltage: 200 V AC)
Output Voltage	56 V
Maximum Output Current	17.86 A (Input Voltage: 176 V AC to 290 V AC or 190 V DC to 290 V DC)

	16.61 A (Input Voltage: 90 V AC to 176 V AC, 176 V AC not included)
Maximum Output Power	1000 W (Input Voltage: 176 V AC to 290 V AC or 190 V DC to 290 V DC) 930 W (Input Voltage: 90 V AC to 176 V AC, 176 V AC not included)
PoE Power Consumption	740 W (Dual power supply modules: 1480 W)
Ground Leakage Current	≤ 3.5 mA
Dimensions (W x D x H)	196 mm x 90 mm x 40 mm (7.72 in. x 3.54 in. x 1.57 in.)
Weight	1 kg (2.20 lbs.)
Operating Temperature	-10°C to 55°C (14°F to 131°F)
Storage Temperature	-40°C to 70°C (-40°F to 158°F)
Relative Operating Humidity	5% to 95% RH (non-condensing)
Relative Storage Humidity	5% to 95% RH (non-condensing)
Operating Height	0 to 5000 m (3.11 miles) above the sea level

Features

Features	Benefit
Conformal Coating	Moisture-proof, salt spray-proof, mold-proof, insulation-proof and leak-proof
Protection	Undervoltage protection, output overcurrent protection, output overvoltage protection and output short circuit protection
I2C Communication	The switch can communicate with the power supply module through I2C.
Power Redundancy	System supports 1+1 power redundancy when the power consumption is less than 740 W. Dual power supply modules are connected in parallel for current sharing.
Hot Swapping	In the power redundancy mode, the power supply module can be replaced when the system is powered on.
Alarming	When a power fault occurs, the output status LED turns off.

LED

Function	Color	Status
Output Status LED	Off	The power supply module is not connected with a power cord.
	Solid Red	A power output error occurs, including fan fault, output short-circuit, output overcurrent protection, output overvoltage protection, power supply failure and overheat protection.
	Solid Green	The power supply module is outputing power normally.

2 Preparing for Installation

2.1 Safety Precautions

To avoid personal injury and device damage, carefully read the safety precautions before you install the switch.

The following safety precautions may not cover all possible dangers.

2.1.1 General Safety Precautions

- Keep the chassis clean, free from any dust.
- Do not place the device in walking areas.
- During the installation and maintenance, do not wear loose clothes, ornaments, or any other things that may be hooked by the chassis.
- Cut off all the power supplies and unplug all power cords before moving or handling the switch.

2.1.2 Handling Safety

- Prevent the switch from being frequently handled.
- Keep balance and prevent personal injuries when handling the switch
- Cut off all the power supplies and unplug all power cords before moving or handling the switch.

2.1.3 Electric Safety

- Observe local regulations and specifications during electric operations. Only personnel with relevant qualifications can perform such operations.
- Check whether there are potential risks in the work area. For example, check whether the power supply is grounded, whether the grounding is reliable, and whether the ground is wet.
- Find out the position of the indoor emergency power switch before installation. Cut off the power switch in case of accidents.
- Do not maintain the device by yourself when the device is powered on.
- Make sure that the device is powered off when you cut off the power supply.
- Do not place the switch in a wet position, and keep the switch away from liquid.

Any nonstandard and inaccurate operation can cause an accident such as fire or electrical attack, thus causing severe damages to human bodies and device.

Direct or indirect touch through a wet object on high-voltage and mains supply can bring a fatal danger.

If a power supply system is equipped with a leakage protector (also referred to as “leakage current switch” or “leakage current breaker”), the rated leakage action current of each leakage protector is greater than twice of the theoretical maximum leakage current of all the power supplies in the system. For example, if a system is equipped with 16 identical power supplies, the leakage current of each power supply is equal to or less than 1.75 mA, and the leakage current of the system totals 28 mA. A leakage protector with 30 mA rated action current supports less than nine power supplies (that is, Action current of the leakage protector/2/Maximum leakage current of each power supply = 30/2/1.75 ≈ 8.57). In other words, the leakage protector with 30

mA rated action current supports no more than eight power supplies. In this case, the 16 power supplies in the system require at least two leakage protectors with 30 mA rated action current and each leakage protector supports eight power supplies. If power supplies in a system differ in models, the rated leakage action current of each leakage protector divided by two is greater than the sum of maximum leakage currents of all the power supplies. The rated leakage non-action current of a leakage protector shall be 50% of the leakage action current. Take a leakage protector with 30 mA rated leakage action current as an example. The rated leakage non-action current shall be 15 mA. When the leakage current is below 15 mA, the protector shall not act. Otherwise, misoperation may easily occur due to high sensitivity and thus the leakage protector trips, devices are powered off, and services are interrupted.

To guarantee personal safety, the rated leakage action current of each leakage protector in the system must be equal to or less than 30 mA (human body safety current is 30 mA). When twice of the total leakage current of the system is greater than 30 mA, the system must be equipped with two or more leakage protectors.

For the leakage current value of each power supply model, see the power supply model specifications in Chapter 1.

2.1.4 Electrostatic Discharge Safety

To prevent damage from static electricity, you must pay attention to the following:

- Properly ground the device and floor.
- Keep the indoor installation environment clean and free of dust.
- Maintain appropriate humidity conditions.

2.1.5 Laser Safety

Among the modules supported by the switch, there are many transceiver modules that are Class I laser products.

- When a fiber transceiver works, ensure that the port has been connected with a fiber or covered by a dust cap to keep out dust and prevent it from burning your eyes.
- Do not stare at any fiber port.

2.2 Installation Environment Requirements

Install the switch indoors to ensure its normal operation and prolonged service life. The installation site must meet the following requirements.

2.2.1 Ventilation Requirements

Maintain a minimum clearance of 100 mm (3.94 in.) around the device for air circulation. After various cables are connected, bundle the cables or place them in the cable management bracket to avoid blocking air inlets.

2.2.2 Temperature/Humidity Requirements

To ensure the normal operation and prolonged service life of the switch, maintain an appropriate temperature and humidity in the equipment room. The equipment room with too high or too low temperature and humidity for a long period may damage the switch.

- In an environment with high relative humidity, the insulating material may have poor insulation or even leak electricity.
- In an environment with low relative humidity, static electricity is prone to occur and damage the internal circuits of the switch.

- Too high temperatures can accelerate the aging of insulation materials, greatly reducing the reliability of the switch and severely affecting its service life.

Temperature and Humidity

Temperature	Relative Humidity
0ºC to 45ºC (32ºF to 113ºF)	10% to 90% (non-condensing)

The ambient temperature and humidity of the switch are measured at the point that is 1.5 m (59.06 in.) above the floor and 0.4 m (15.75 in.) before the switch rack when there is no protective plate in front or at the back of the rack

2.2.3 Cleanliness Requirements

Dust poses a major threat to the switch. The indoor dust takes on a positive or negative static electric charge when falling on the switch, causing poor contact of the metallic joint. Such electrostatic adhesion may occur more easily when the relative humidity is low, not only affecting the service life of the switch, but also causing communication faults. The following table describes the requirements for the dust content and granularity in the equipment room.

Dust	Unit	Content
Dust particles (diameter ≥ 0.5 μm)	Particles/m3	≤ 3.5×10^6
Dust particles (diameter ≥ 5 μm)	Particles/m3	≤ 3×10^4

Apart from dust, the salt, acid, and sulfide in the air in the equipment room must meet strict requirements. These harmful substances will accelerate metal corrosion and component aging. Therefore, the equipment room should be properly protected against the intrusion of harmful gases, such as sulfur dioxide, hydrogen sulfide, nitrogen dioxide, and chlorine gas.

Gas	Average (mg/m^3)	Maximum (mg/m^3)
Sulfur dioxide (SO_2)	0.3	1.0
Hydrogen sulfide (H_2S)	0.1	0.5
Nitrogen dioxide (NO_2)	0.5	1.0
Chlorine gas (Cl_2)	0.1	0.3

The Average refers to the average limit of harmful gas in one week. The Maximum value is the upper limit of the harmful gas measured in one week for up to 30 minutes every day.

2.2.4 Anti-interference Requirements

The AP is susceptible to external interference by capacitive coupling, inductive coupling, electromagnetic waves, common impedance (ground) coupling, or conduction over power lines, signal lines and output lines. Note that:

- In a TN earthing system, use a 3-wire single-phase outlet that has a protective earth (PE) contact to allow the filter circuit in the device to eliminate interference from the power grid.
- The switch should be located far away from the large power radio launch pad, radar launch pad, and high-frequency large-current devices.
- Use EMI shielding such as shielded interface cables to minimize interference when necessary.
- Route interface cables only indoors to prevent signal ports from getting damaged by overvoltage or overcurrent caused by lightning strikes.

2.2.5 Grounding Requirements

A proper grounding system is the basis for stable and reliable running and is indispensable for preventing lightning strikes and interference. Carefully check the grounding conditions at the installation site according to the grounding specifications, and complete grounding properly based on the actual situation.

Safe Grounding

Ensure that the rack and power distribution device are securely grounded when the switch uses the AC power supply. Otherwise, electric shock may occur when the insulation resistance between the power supply inside the switch and the chassis becomes small.

Lightning Grounding

The lightning protection system of facilities is standalone, and is composed of a lightning rod, a lower conductor, and a connector connected to the grounding system. The grounding system is usually used for power reference grounding and safety grounding of the rack. Lightning grounding is required only for facilities and is not required for the switch.

EMC Grounding

Grounding required for electromagnetic compatibility includes shielded grounding, filter grounding, noise and interference suppression, and level reference, which contribute to the overall grounding requirements. The grounding resistance should be smaller than 1 ohm. The back panel has one Grounding Stud.

Figure 2-1 Grounding

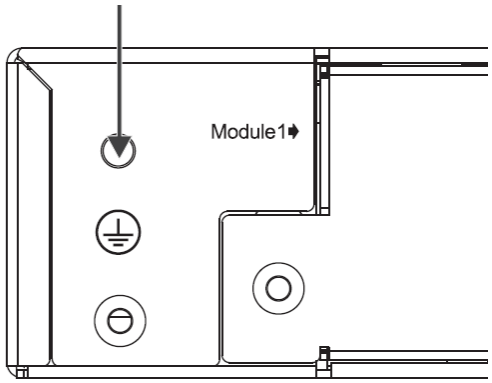

2.2.6 Lightning Protection Requirements

The external lightning protection cable row shall be used on the AC power port to prevent the switch from being struck by lightning when the AC power cord is introduced from the outdoor and directly connected to the power port of the switch. The port surge arrestor can be fixed with cable ties and screws on the rack, work bench or the wall on the equipment room. When a surge arrestor is being used, alternating current flows through the surge arrestor before entering the switch.

- Surge arrestors are customer supplied.
- For details of surge arrestors, see the related user guide.

2.2.7 EMI Requirements

All interference sources, either from outside or inside of the device or application system, affect the device by capacitive coupling, inductive coupling, or electromagnetic waves.

Electromagnetic interference (EMI) occurs due to electromagnetic radiation or conduction, depending on the transmission path.

When the energy, often RF energy, from a component arrives at a sensitive component via the space, the energy is known as radiated interference. The interference source can be both a part of the interfered system and a completely electrically isolated unit. Conduction interference occurs when interference is transferred from one unit to another unit through cables, which are usually electromagnetic wires or signal cables connected between the source and the victim. Conducted interference often affects the power supply of the equipment, but can be controlled by a filter. Radiated interference may affect any signal path in the equipment, and is difficult to shield.

- Take interference prevention measures for the power supply system.
- Keep the switch far away from the lightening protection and grounding system of the power device.
- Keep the switch far away from high-frequency current devices such as high-power radio transmitting station and radar launcher.
- Take electromagnetic shielding measures when necessary.

2.3 Fiber-Optic Cable Connection Requirements

Make sure the model of the SFP module and fiber-optic cable matches the SFP port. The transmit port on the local device should be connected to the receive port on the peer device and vice versa.

2.4 Tools

Common Tools	Phillips screwdriver, slotted screwdriver, related copper and fiber-optic cables, bolts, diagonal pliers, cable ties
Special Tools	ESD tools
Meter	Multimeter

No tool kit is delivered with the RG-S5300-E and RG-S5310-E series switches.

3 Installing the Switch

Ensure that requirements in Chapter 2 are all met.

3.1 Installing Procedure

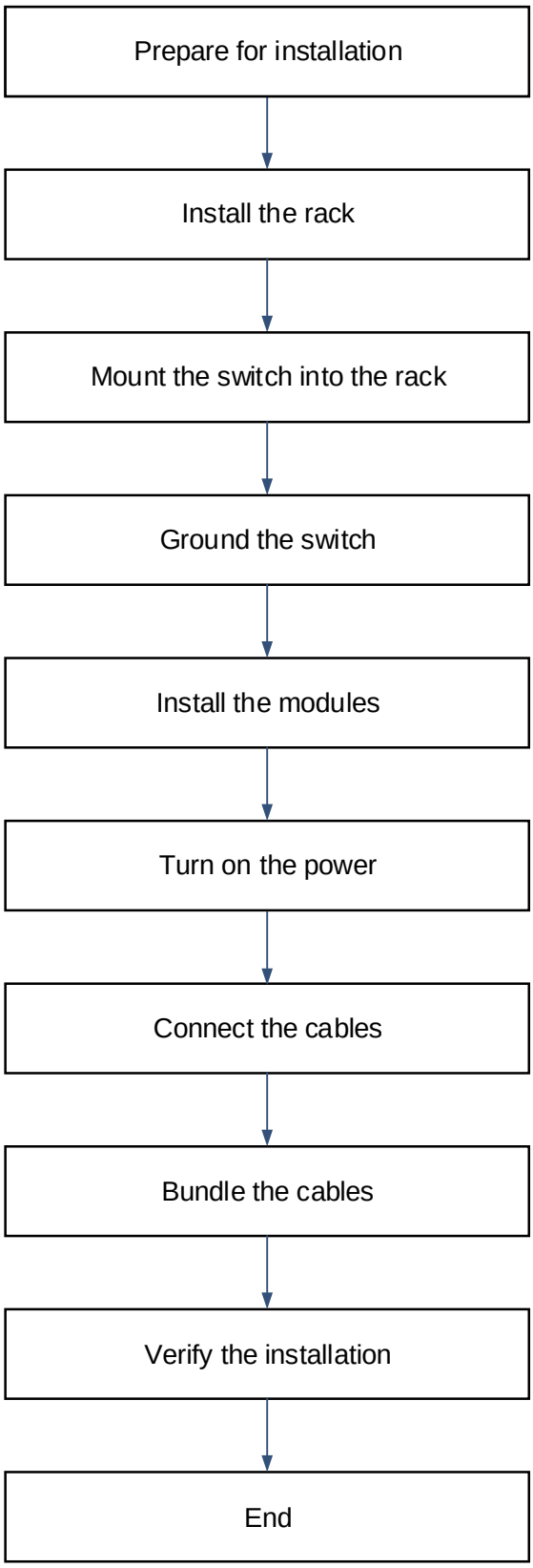

3.2 Before You Begin

Confirm the following requirements before installation:

- The installation site provides sufficient space for heat dissipation.
- The installation site meets the temperature and humidity requirements of the switch.
- The power supply and required current are available in the installation site.
- The Ethernet cables have been deployed in the installation site.

3.3 Mounting the Switch

Notes

- Connect the power cords of different colors to the corresponding grounding posts.
- Ensure the power cords are securely connected.
- Do not place heavy objects on the switch.
- Maintain a minimum clearance of 100 mm (3.94 in.) around the device for air circulation.
- Keep the switch away from high-power radio stations, radar stations, and high-frequency high-current devices. Use EMI shielding such as shielded interface cables to minimize interference when necessary.
- Route interface cables only indoors to prevent signal ports from getting damaged by overvoltage or overcurrent caused by lightning strikes.

3.3.1 Mounting the Switch in a Rack

All models of the RG-S5300-E and RG-S5310-E series switches can be installed in a standard 19-in. four-post EIA rack. Mount the switch in the rack with the front panel face forward.

1. Use a Phillips-head screw driver to secure a bracket to each side of the switch with two screws.

Figure 3-1 Securing Brackets

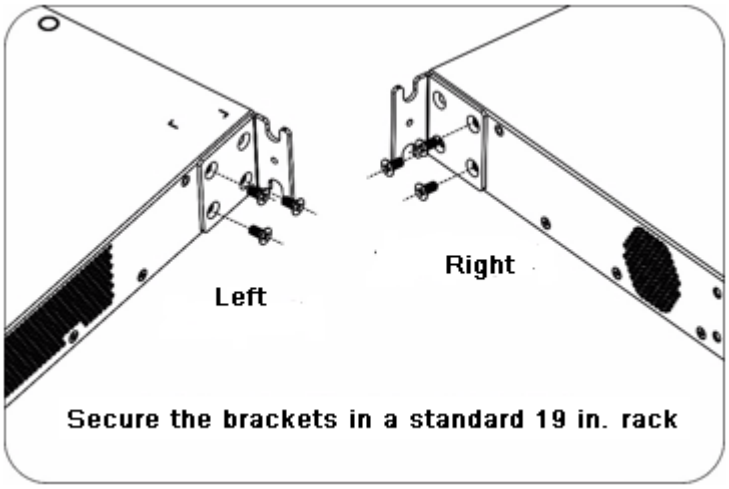

2. Install two cage nuts on the inside of each front rack and drive the screws halfway into the cage nuts.

Figure 3-2 Installing Cage Nuts and Screws

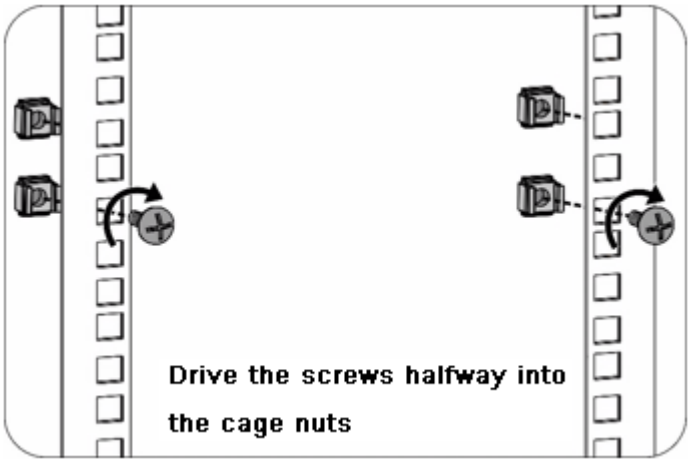

3. Secure the switch on the rack rails by tightening the screws.

Figure 3-3 Tightening Screws

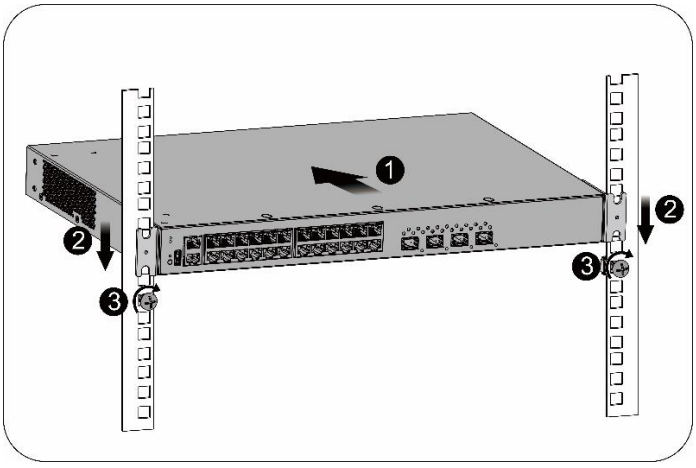

4. Insert screws into the other two cage nuts and tighten them.

Figure 3-4 Tightening Other Screws

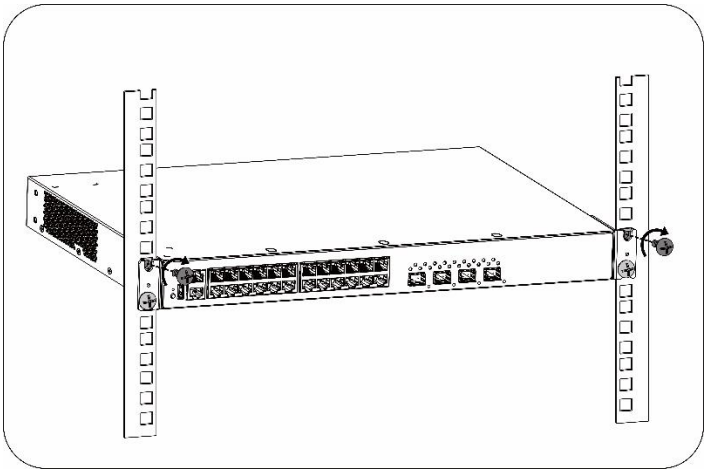

3.3.2 Mounting the Switch on the Wall

All models of the RG-S5300-E series switches can be installed on the wall. All models of the RG-S5310-E series switches cannot be installed on the wall.

1. Rotate the brackets by 90 degrees and secure the brackets to the switch by using the screws.

Figure 3-5 Securing Brackets

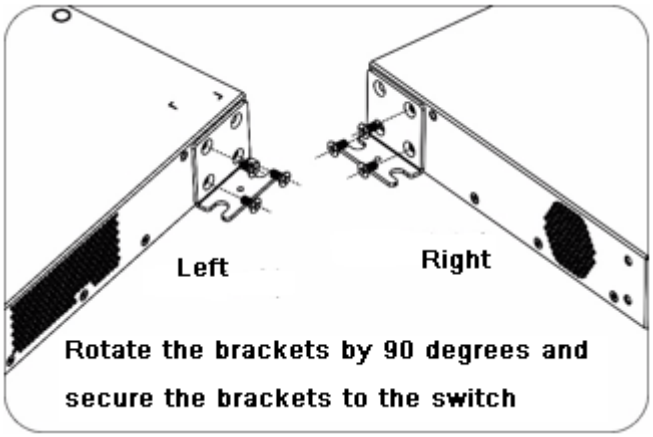

2. Secure the switch by using the expansion bolts.

Figure 3-6 Securing the Switch

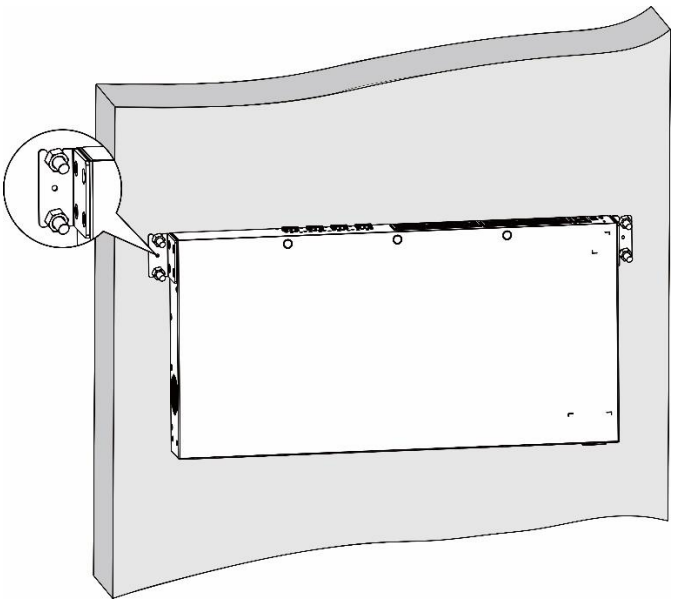

3.3.3 Installing the Switch on a Workbench

In most cases, users do not have a standard 19-inch rack. Therefore, the most popular method is to place the switch on a clean workbench.

- Attach the four rubber pads to the four corners on the bottom.
- Place the switch on the workbench to allow for adequate airflow.

3.4 Installing and Removing a Power Supply Module

Wear an anti-static wrist strap before the following operation.

Installing the AC Power Supply Module

1. Remove the module from its packing materials and make sure the input specifications meet requirements.
2. Remove the blank filler panel in the empty slot. Keep the module nameplate face upward. Grasp the handle with one hand and place your other hand under the module to support its weight. Slide the module all the way into the slot along the guide rail until you feel the connector snap into place.

Figure 3-7 Installing the Module

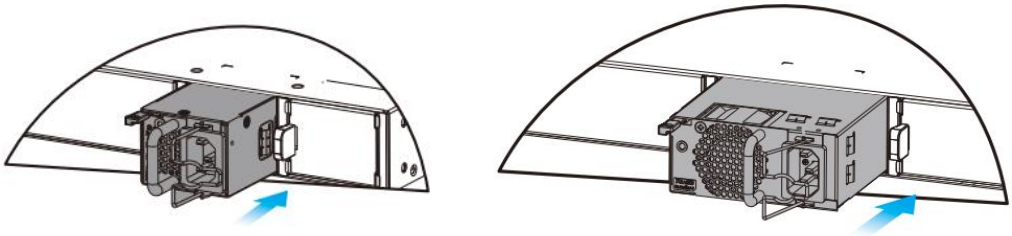

Slide the module into the slot. Verify that the power supply module is in the correct orientation.

If you find it difficult to fully insert the module, pull the module out, align it to the guide rails and slide it into the slot again.

Removing the AC Power Supply Module

1. Press the latch on the module and grasp the handle with one hand. Place your other hand under the module to support its weight. Pull the module fully out of the slot.
2. Install the filler panel in the empty slot. Put the removed module back into its packing materials.

Figure 3-8 Removing the Module

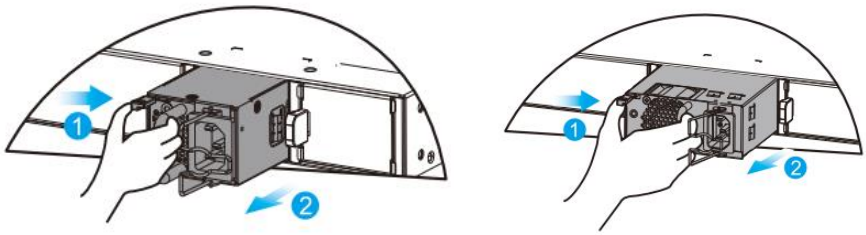

Pull the module out of the slot gently.

Install the filler panel in the empty slot to allow for adequate airflow.

Installing the DC Power Supply Module

1. Remove the module from its packing materials and make sure the input specifications meet requirements.
2. Remove the blank filler panel in the empty slot. Keep the module nameplate face upward. Grasp the handle with one hand and place your other hand under the module to support its weight. Slide the module all the way into the slot along the guide rail until you feel the connector snap into place. The two screws of the DC power supply are the input of the power supply. Remove the

protective cover of the power input terminal, loosen the screw, and connect the terminals of the power cord. From left to right, they are blue and red, and then cover the terminal protective cover.

3. Connect the other end of the power cord to the DC terminal block of the rack. Connect the blue power cord to -48 V DC, and the red power cord to the -48 V GND.

Figure 3-9 Installing the Module

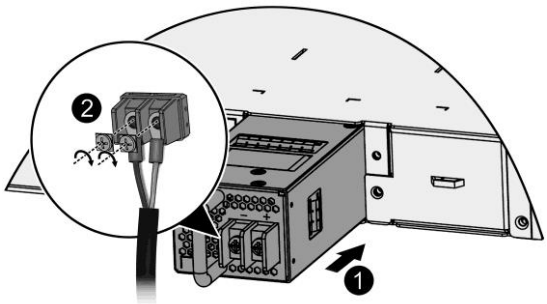

Figure 3-10 DC Terminal Block

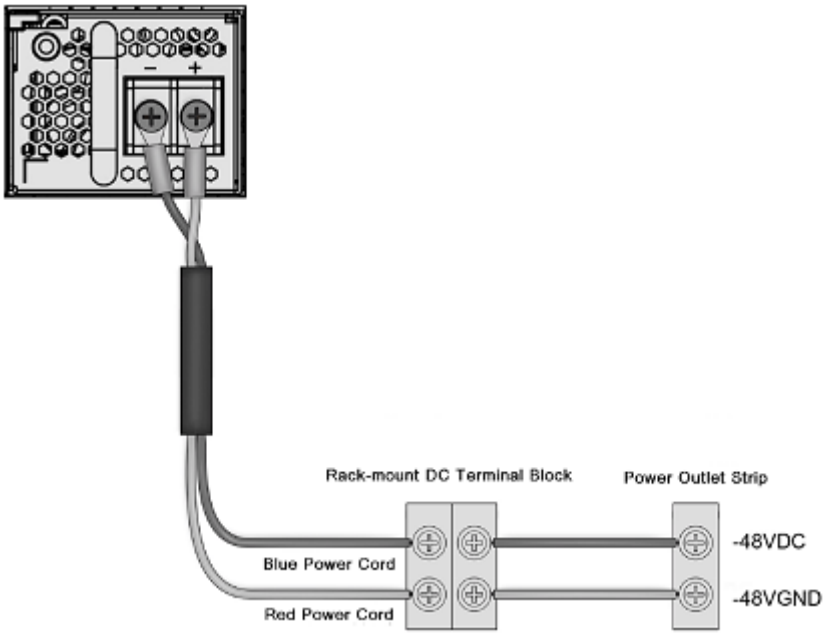

Slide the module into the slot. Verify that the power supply module is in the correct orientation.

If you find it difficult to fully insert the module, pull the module out, align it to the guide rails and slide it into the slot again.

Removing the DC Power Supply Module

1. Press the latch on the module and grasp the handle with one hand. Place your other hand under the module to support its weight. Pull the module fully out of the slot.

2. Install the filler panel in the empty slot. Put the removed module back into its packing materials.

Figure 3-11 Removing the Module

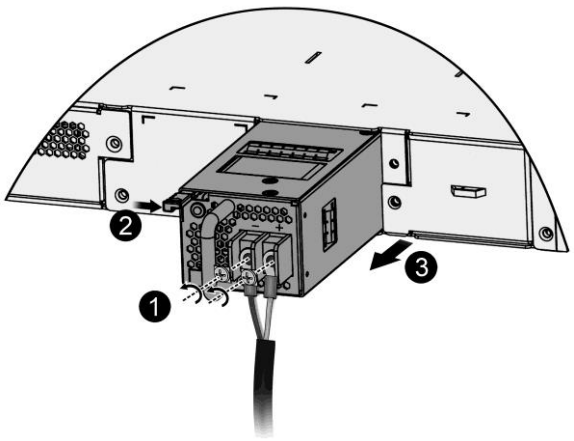

Pull the module out of the slot gently.

Install the filler panel in the empty slot to allow for adequate airflow.

3.5 Grounding the Switch

Connect the PGND to the grounding lug of the rack and then connect the grounding lug to the grounding bar of the equipment room.

Notes

- The sectional area of the grounding wire should be determined according to the possible maximum current. Cables of good conductor should be used.
- Do not have bare wires exposed
- Grounding resistance: Less than 1 ohm.

To guarantee the security of the person and the device, the switch must be grounded properly. The grounding resistance between the chassis and the ground should be less than 1ohm.

The maintenance personnel should check whether the AC socket is reliably connected to the protective ground of the building. If not, the maintenance personnel should use a protective earth conductor from the AC outlet protective earth terminal to the building protective earth.

The power socket should be installed near the device and easily accessible.

The AC power should be connected to an output socket with a ground connection using a power cord.

When installing the switch, connect the grounding first and disconnect it last.

3.6 Connecting Cables

Notes

- Distinguish single-mode and multi-mode fiber-optic cables and ports.
- Avoid a small bend radius at the connector.

Bending Steps

1. Connect the RJ45 connector of an Ethernet cable to the Ethernet port on the device, and the other end to a PC.

2. Insert the single-mode or multi-mode fiber into the corresponding interface according to the panel identification, and distinguish the transmitting and receiving ends of the fiber-optic cable.
3. Insert the twisted pair cable with RJ45 connector into the corresponding interface according to the panel identification, and distinguish the crossover cable and the straight cable.

3.7 Cable Bundling

Notes

- The power cords and other cables should be bundled in a visually pleasing way.
- When you bundle fibers, make sure that the fibers at the connectors have natural bends or bends of large radius.
- Do not bundle fibers and twisted pairs too tightly, as this may press hard the fibers and affect their useful life and transmission performance.

Bundling Steps

1. Bind the drooping part of the fiber-optic cables and twisted pairs of each board, and lead them to both sides of the chassis for convenience.
2. On the both sides of the chassis, fasten the fibers and twisted pairs to the cable management ring or cabling chute.
3. For the power cords, you should bundle them closely along the bottom of the chassis, in a straight line wherever possible.

3.8 Verifying Installation

⚠ Please turn off the power to avoid personal injury and damage to components caused by incorrect connection.

- Verify that the ground wire is connected.
- Verify that the cables and power input cables are properly connected.
- Verify that interface cables are routed indoors. If not, check whether the power supply and interfaces are protected from lightning strikes.
- Maintain a minimum clearance of 100 mm (3.94 in.) around the device for air circulation.

4 Verifying Operating Status

4.1 Setting up Configuration Environment

Setting up Configuration Environment

Connect the PC to the management port of the switch with an Ethernet cable.

Figure 4-1 Configuring Environment

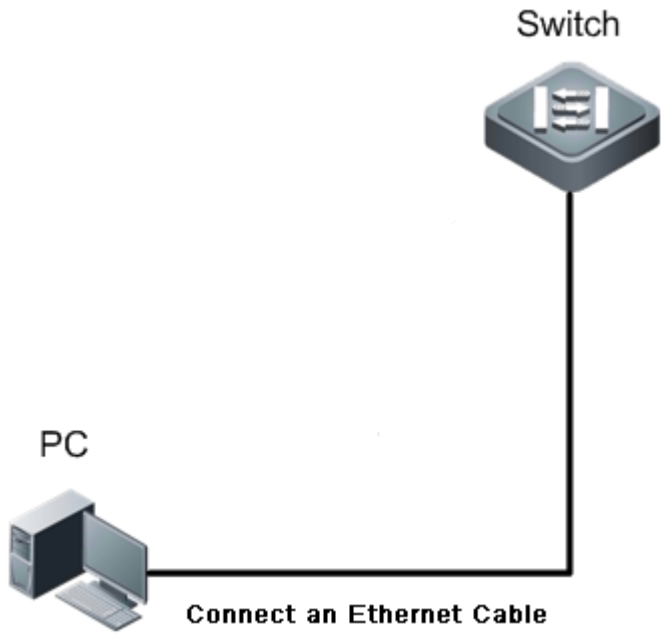

Connecting an Ethernet Cable

- Plug the crystal head of the Ethernet cable into the network port of the PC.
- Connect the RJ-45 end to the Console port on your AC.

Setting Parameters

- Start the PC and run the terminal simulation program on your PC, such as Terminal on Windows 3.1 or HyperTerminal on Windows 95/98/NT/2000/XP.
- Setting terminal parameters. Baud rate: 9600; Data bit: 8; Parity check: None; Stop bit: 1; Flow control: None. Follow the steps below to set the parameters.

1. Navigate to **Start** > **All Programs** > **Accessories** > **Communications** and select **HyperTerminal**.The **Location Information** dialog box will appear.
2. Click **Cancel**. The **Connection Description** dialog box will appear.

Figure 4-2

3. In the **Name** box, enter the new connection name and click **OK.** The **Connect to** dialog will appear. From the **Connect using** drop-down list, select a COM port to be used. Figure 4-3

Figure 4-3

4. Click **OK**. The **COM1 Properties** dialog box will appear. Select the following settings: Bits per second: 9600; Data bits: 8; Parity check: None; Stop bit: 1; Flow control: None.

Figure 4-4

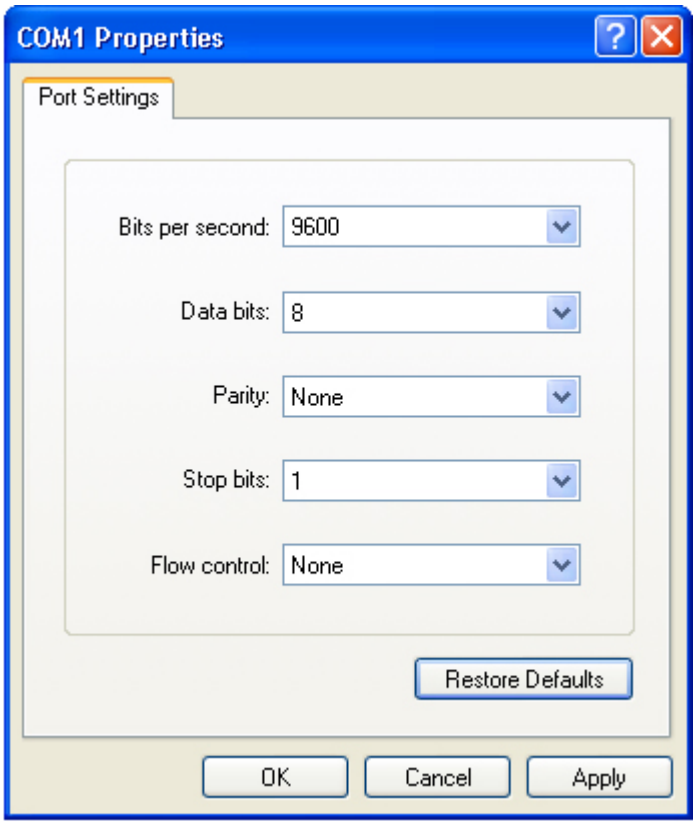

5. Click **OK** and the **HyperTerminal** window will appear.

4.2 Powering on Switch

Checklist before Power-on

- The switch is fully grounded.
- The power cord is properly connected.
- The power cord retention clip secures the input power cord to the power supply.
- The power supply voltage complies with the requirement of the switch.
- The Ethernet cable is properly connected. The terminal (it can be a PC) used for configuration is already started. The parameters are already configured.

Checklist after Power-on (Recommended)

After power-on, check the following:

- Check the information on the terminal interface.
- Check the LED status.

5 Monitoring and Maintenance

5.1 Monitoring

LED

When the switch is running, you can monitor the module status by observing the module LED.

- If the SYS indicator is red, it indicates that the system is faulty. Log in to the web-based management system to troubleshoot the fault.
- If the SYS indicator is yellow, it indicates that the system temperature reaches the warning value. This case may affect the system performance, but the system can continue working. Log in to the web-based management system to troubleshoot the fault.
- For example, if the Status LED keeps blinking or turns red, it indicates the switch is faulty. You are advised to identify the fault cause, and power off the switch when necessary.
- If the PW1/PW2 indicator is yellow, it indicates that the power supply module is not supported. You are advised to replace the power supply module.
- If the PW1/PW2 indicator is red, check whether the power cord is plugged in and supplies power to the switch. If yes, you are advised to replace the power supply module.

If the Status LED keeps blinking during device positioning, it is not a fault symptom.

CLI Commands

You can run the CLI commands to monitor system status, including:

- System status
- Port configuration and status
- Fan and power supply status
- System temperature

For the monitoring commands, see *RG-S5300-E& S5310-E Series Switches Configuration Guide*.

5.2 Maintenance

Cooling System Maintenance

- If the fan module fails, an alarm will be generated.
- Replace the failed fan module.
- Tighten the captive screws.

Power Supply Module Maintenance

When a power supply module is faulty, unplug the power cord, replace the power supply module, plug the power cord again, and close the cable retention clip to secure the power cord to the power supply module.

Replacing Lithium Battery

The device has a built-in lithium battery to maintain the real-time clock without external power to the switch.

To replace the lithium battery, contact technical support personnel.

Replacing the battery with the wrong type may cause explosion or danger. If the battery is damaged, please replace it with the same type.

Exposing the battery to extremely high temperatures and/or extremely low air pressure may cause the battery to explode or leak flammable liquids or gases.

Throwing the battery into a fire or oven, or mechanically crushing or cutting it may cause the battery to explode.

Replacing Fuses

To replace fuses, contact technical support personnel. The technical support personnel will select fuses of the same specifications for replacement.

6 Troubleshooting

6.1 Troubleshooting Flowchart

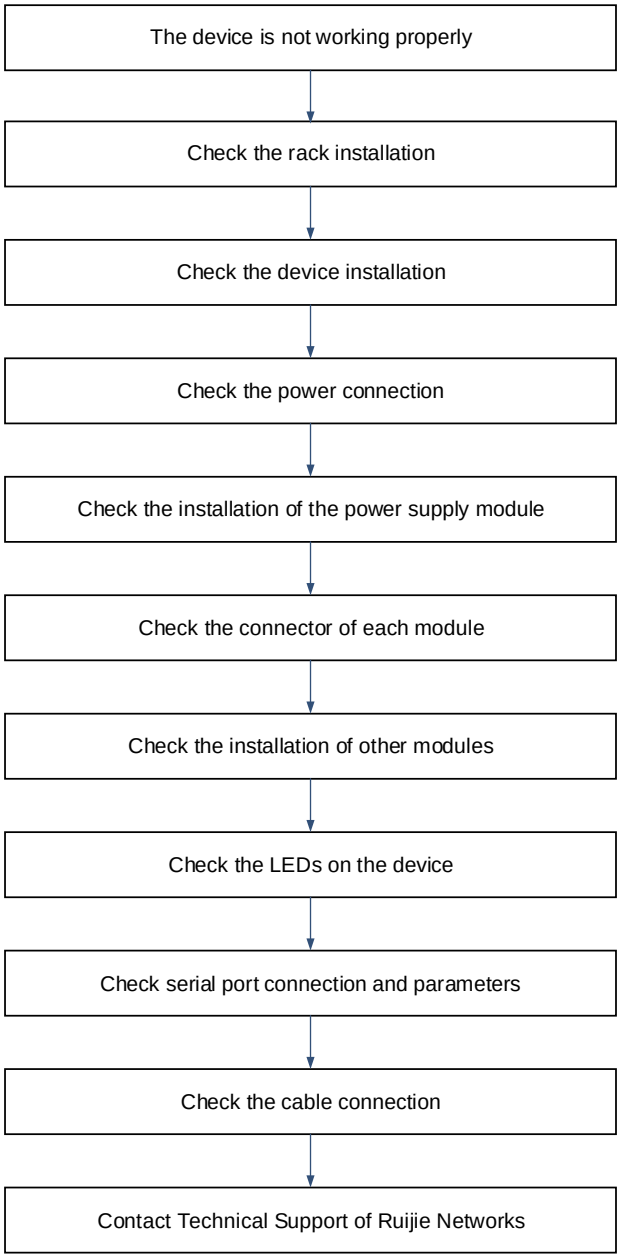

6.2 Troubleshooting

Fault 1: The login password is forgotten.

Symptom

Failed to log into the system.

Suggested Action

Please contact Ruijie technical support.

Fault 2: The AC power module does not work.

Symptom

All LEDs on the front panel are off. The fan status LED is off.

The power supply status LED is off. The fan does not rotate.

Suggested Action

1. Unplug the power cord from the power supply module.
2. Check whether the power cord is securely connected to the power socket.
3. Check whether the power cord is securely connected to the power supply module.
4. Check whether the power supply module is securely seated. If necessary, pull out the power supply module and check its connector.

Fault 3: The serial port console has no output.

Symptom

After the system is started, the serial port console does not display any information.

Suggested Action

1. Check the serial cable.
2. Ensure that the connected serial port is consistent with what is configured on the HyperTerminal.
3. Check whether the configuration of the serial port on the HyperTerminal is consistent with that in Configuration Guide.
4. If there is still no output on the serial port, please contact Ruijie technical support.

Fault 4: The serial port console output is garbled.

Symptom

The serial port console output is garbled.

Suggested Action

The fault is related to the serial port configuration. Check the baud rate configuration is consistent with that in Configuration Guide.

Fault 5: The link cannot be set up on the fiber port.

Symptom

After the SFP module is inserted into the fiber port with the fiber-optic cable plugged in, the link cannot be set up on the fiber port.

Suggested Action

Take the following steps:

1. Check whether the receiving end and transmitting end are reversed. The transmitting end of a fiber port must be connected to the corresponding receiver at the other end. You can confirm both ends by exchanging the connection order of two fiber-optic cables.
2. Check whether the wavelength of the SFP modules on the two sides are consistent. For example, an SFP module with a

wavelength of 1310 nm cannot be connected to an SFP module of 1550 nm.

3. Check whether the distance between the two sides exceeds the maximum length marked on the SFP module.
4. Check whether the speeds of the two sides match and whether the optical fiber type meets requirements.

7 Appendix

7.1 Connectors and Media

1000BASE-T/100BASE-TX/10BASE-T

The 1000BASE-T/100BASE-TX/10BASE-T is a 10/100/1000 Mbps auto-negotiation port that supports auto MDI/MDIX Crossover.

Compliant with IEEE 802.3ab, 1000BASE-T requires Category 5e 100-ohm UTP or STP (STP is recommended) with a maximum distance of 100 meters (328 feet).

1000BASE-T requires all four pairs of wires be connected for data transmission.

Figure 7-1 1000BASE-T Connection

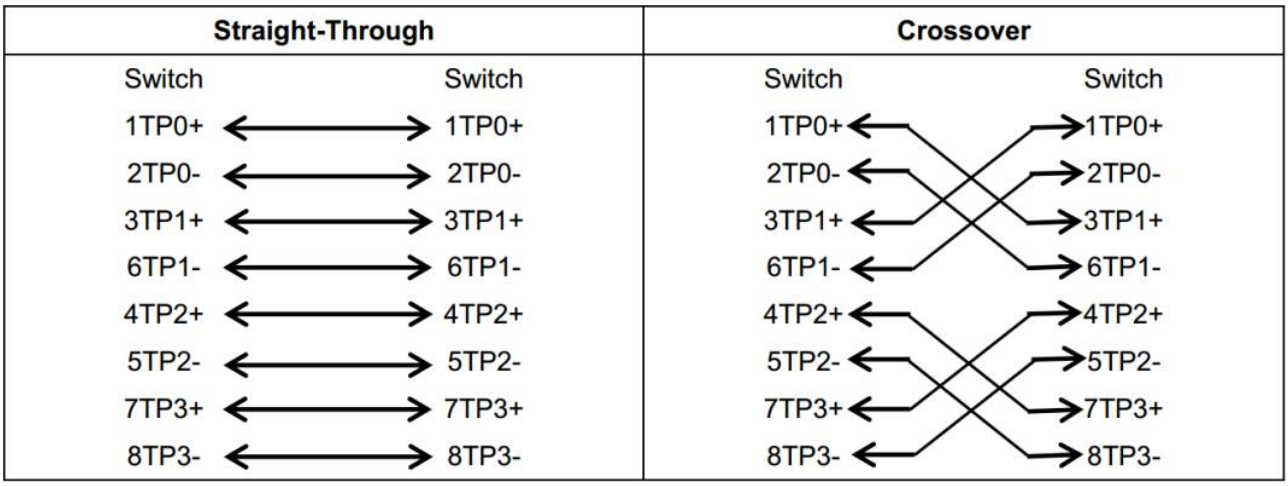

10BASE-T uses Category 3, 4, 5 100-ohm UTP/STP and 1000BASE-T uses Category 5 100-ohm UTP/STP for connections. Both support a maximum length of 100 meters.

Table 7- shows 100BASE-TX/10BASE-T pin assignments.

Table 7- 1 100BASE-TX/10BASE-T Pin Assignments

Pin	Socket	Plug
1	Input Receive Data+	Output Transmit Data+
2	Input Receive Data-	Output Transmit Data-
3	Output Transmit Data+	Input Receive Data+
6	Output Transmit Data-	Input Receive Data-
4, 5, 7, 8	Not Used	Not Used

Figure 7- shows wiring of straight-through and crossover cables for 100BASE-TX/10BASE-T.

Figure 7-2 100BASE-TX/10BASE-T Connection

Straight-Through		Crossover	
Switch	Adapter	Switch	Switch
1 IRD+ ↔	1 OTD+	1 IRD+ ←	→ 1 IRD+
2 IRD- ↔	2 OTD-	2 IRD- ←	→ 2 IRD-
3 OTD+ ↔	3 IRD+	3 OTD+ ←	→ 3 OTD+
6 OTD- ↔	6 IRD-	6 OTD- ←	→ 6 OTD-

Fiber Connection

You can choose single mode or multimode fibers according to the module types.

Figure 7- shows connection of fiber-optic cable.

Figure 7-3 Fiber-Optic Cable Connection

7.2 Mini-GBIC Modules

We provide appropriate SFP modules (Mini-GBIC modules) according to the port types. You can select the module to suit your specific needs. Besides, the Mini-GBIC-GT module is also supported. The following models and technical specifications of some SFP modules are listed for your reference. See *Ruijie Transceiver Installation and Reference Guide* for details.

Table 7-2 Mini-GBIC (SFP) Models and Specifications

Model	Wavelength (nm))	Cable Type	Support DDM (Yes/No)	Intensity of Transmitted Light (dBm)		Intensity of Received Light (dBm)	
				min	max	min	max
MINI-GBIC-SX-MM850	850	MMF1 (MPO connector)	No	-9.5	-3	-17	0
MINI-GBIC-LX-SM1310	1310	SMF2 (LC connector)	No	-9.5	-3	-20	-3
GE-SFP-SX	850	MMF1 (MPO connector)	No	-9.5	-3	-17	0
GE-SFP-LX	1310	SMF2 (LC connector)	No	-9.5	-3	-20	-3
GE-SFP-SX-SM1550-BIDI	1550TX/1310RX	MMF1 (MPO connector)	No	-10	-5	-17	-3
GE-SFP-SX-SM1310-BIDI	1310TX/1550RX	MMF1 (MPO connector)	No	-10	-5	-17	-3
GE-eSFP-SX-MM850	850	MMF1 (MPO connector)	Yes	-9.5	-3	-17	0
GE-eSFP-LX-SM1310	1310	SMF2 (LC connector)	Yes	-9.5	-3	-20	-3
GE-SFP-LX-SM1310	1310	SMF2 (LC connector)	No	-9.5	-3	-20	-3
GE-SFP-LX20-SM1310-BIDI	1310TX/1550RX	SMF2 (LC connector)	Yes	-9	-3	-20	-3
GE-SFP-LX20-SM1550-BIDI	1550TX/1310RX	SMF2 (LC connector)	Yes	-9	-3	-20	-3
GE-SFP-LH40-SM1310-BIDI	1310TX/1550RX	SMF2 (LC connector)	Yes	-5	0	-24	-1
GE-SFP-LH40-SM1550-BIDI	1550TX/1310RX	SMF2 (LC connector)	Yes	-5	0	-24	-1
MINI-GBIC-LH40-	1310	SMF2 (LC	Yes	-2	3	-22	-3

SM1310		connector)					
MINI-GBIC-ZX50-SM1550	1550	SMF2 (LC connector)	Yes	-5	0	-22	-3
MINI-GBIC-ZX80-SM1550	1550	SMF2 (LC connector)	Yes	0	4.7	-22	-3
MINI-GBIC-ZX100-SM1550	1550	SMF2 (LC connector)	Yes	0	5	-30	-9

Table 7-3 SFP Copper Module

Standard	1000Base-T SFP Module	Support DDM (Yes/No)
1000Base-T	Mini-GBIC-GT	No

Table 7-4 Cabling Specifications

SFP Model	Interface type	Cable Type	Core Specification (um)	Max Cabling Distance
MINI-GBIC-SX-MM850	LC	MMF1 (MPO connector)	62.5/125	275 m
			50/125	550 m
MINI-GBIC-LX-SM1310	LC	SMF2 (LC connector)	9/125	10 km
GE-eSFP-SX-MM850	LC	MMF1 (MPO connector)	62.5/125	275 m
			50/125	550 m
GE-eSFP-LX-SM1310	LC	SMF2 (LC connector)	9/125	10 km
GE-SFP-LX-SM1310	LC	SMF2 (LC connector)	9/125	10 km
MINI-GBIC-LH40-SM1310	LC	SMF2 (LC connector)	9/125	40 km
GE-SFP-SX-SM1310-BIDI	LC	MMF1 (MPO connector)	50/125	500 m
GE-SFP-SX-SM1550-BIDI	LC	MMF1 (MPO connector)	50/125	500 m
GE-SFP-LX20-SM1310-BIDI	LC	SMF2 (LC connector)	9/125	20 km
GE-SFP-LX20-SM1550-BIDI	LC	SMF2 (LC connector)	9/125	20 km
GE-SFP-LH40-SM1310-BIDI	LC	SMF2 (LC connector)	9/125	40 km
GE-SFP-LH40-SM1550-BIDI	LC	SMF2 (LC connector)	9/125	40 km
MINI-GBIC-ZX50-SM1550	LC	SMF2 (LC connector)	9/125	50 km
MINI-GBIC-ZX80-	LC	SMF2 (LC connector)	9/125	80 km

SM1550				
MINI-GBIC-ZX100-SM1550	LC	SMF2 (LC connector)	9/125	100 km
SDH155-SFP-SX-MM850	LC	MMF1 (MPO connector)	62.5/125	500 m
SDH155-SFP-SX-MM1310	LC	MMF1 (MPO connector)	62.5/125	2 km
SDH155-SFP-LH15-SM1310	LC	SMF2 (LC connector)	9/125	15 km
SDH155-SFP-LH40-SM1310	LC	SMF2 (LC connector)	9/125	40 km
SDH155-SFP-LH80-SM1310	LC	SMF2 (LC connector)	9/125	80 km
GE-SFP-SX	LC	MMF1 (MPO connector)	62.5/125	275 m
			50/125	550 m
GE-SFP-LX	LC	SMF2 (LC connector)	9/125	10 km
Mini-GBIC-GT	RJ45 cable	Standard Cat-5 and above unshielded or shielded twist pairs		100 m

For SFP modules with a maximum cabling distance of over 40 km (including 40 km), install an attenuator to avoid overload when using short fiber-optic cables:

The SFP module is a laser device. Please do not look into the laser beam directly.

To keep the SFP module clean, please make sure that the unused ports remain capped.

Table 7-5 Pairing Models of the 1000 Mbps BIDI Module

Speed/Distance	Paring Models
1000 Mbps/500 m	GE-SFP-SX-SM1310-BIDI GE-SFP-SX-SM1550-BIDI
1000 Mbps/20 km	GE-SFP-LX20-SM1310-BIDI GE-SFP-LX20-SM1550-BIDI
1000 Mbps/40 km	GE-SFP-LH40-SM1310-BIDI GE-SFP-LH40-SM1550-BIDI

BIDI modules must be used in pairs. If GE-SFP-LX20-SM1310-BIDI is used at one end, then GE-SFP-LX20-SM1550-BIDI must be applied to the other end.

7.3 SFP+ Modules

We provide appropriate SFP+ modules according to the port types. You can select the module to suit your specific needs. The following models and technical specifications of some SFP+ modules are listed for your reference. See *Ruijie Transceiver Installation and Reference Guide* for details.

Table 7-6 10-Gigabit SFP+ Models and Specifications

Model	Wavelength (nm)	Support DDM (Yes/No)	Cable Type	Intensity of Transmitted Light (dBm)		Intensity of Received Light (dBm)	
				Min	Max	Min	Max
XG-SFP-SR-MM850	850	Yes	MMF1 (MPO connector)	-5	-1	-7.5	0.5
XG-SFP-SR-SM1270-BIDI	1270	No	MMF1 (MPO connector)	-3	4	-9	0.5
XG-SFP-SR-SM1330-BIDI	1270	No	MMF1 (MPO connector)	-3	4	-9	0.5
XG-SFP-LR-SM1270-BIDI	1270	No	SMF2 (LC connector)	-6.5	0.5	-14.4	0.5
XG-SFP-LR-SM1330-BIDI	1330	No	SMF2 (LC connector)	-6.5	0.5	-14.4	0.5
XG-SFP-LR-SM1310	1310	Yes	SMF2 (LC connector)	-8.2	0.5	-14.4	0.5
XG-SFP-ER-SM1550	1550	Yes	SMF2 (LC connector)	-4.7	4	-11.3	-1
XG-SFP-ZR-SM1550	1550	Yes	SMF2 (LC connector)	0	4	-24	-7
XS-SFP-SR	850	Yes	MMF1 (MPO connector)	-5	-1	-7.5	0.5
XS-SFP-LR	1310	Yes	SMF2 (LC connector)	-8.2	0.5	-10.3	0.5

Table 7-7 Cabling Specifications

Model	Interface Type	Cable Type	Core Size (um)	Modular Bandwidth (MHz·km)	Max Cabling Distance
XG-SFP-SR-MM850	LC	MMF1 (MPO connector)	62.5/125	200 (OM1) 160	33 m 26 m
			50/125	2000 (OM3) 500 (OM2)	300 m 82 m

				400 (OM1)	66 m
XG-SFP-SR-SM1270-BIDI	LC	MMF1 (MPO connector)	50/125	2000 (OM3)	300 m
XG-SFP-SR-SM1330-BIDI	LC	MMF1 (MPO connector)	50/125	2000 (OM3)	300 m
XG-SFP-LR-SM1270-BIDI	LC	SMF2 (LC connector)	9/125	N/A	10 km
XG-SFP-LR-SM1330-BIDI	LC	SMF2 (LC connector)	9/125	N/A	10 km
XG-SFP-LR-SM1310	LC	SMF2 (LC connector)	9/125	N/A	10 km
XG-SFP-ER-SM1550	LC	SMF2 (LC connector)	9/125	N/A	40 km
XG-SFP-ZR-SM1550	LC	SMF2 (LC connector)	9/125	N/A	80 km
XS-SFP-SR	LC	MMF1 (MPO connector)	62.5/125	200 (OM1) 160	33 m 26 m
			50/125	2000 (OM3) 500 (OM2) 400 (OM1)	300 m 82 m 66 m
XS-SFP-LR	LC	SMF2 (LC connector)	9/125	N/A	10 km

For the XG-SFP-ER-SM1550 and XG-SFP-ZR-SM1550 modules, please do not use short-distance fiber-optic cables for connection to avoid overloading the optical receiver of the module. If the optical power at the receiving end of the module is greater than or equal to -1 dBm, an appropriate attenuator should be added at the receiving end of the module to make the optical power at the receiving end less than -1 dBm.

The module is a laser device. Please do not look into the laser beam directly.

To keep the module clean, please make sure that the dust cap is mounted when it is not connected to cables.

Table 7-8 10-Gigabit SFP+ Cable Modules and Specifications

Model	Module Type	Connector Type	Cable Length (M)	Conductor Diameter (AWG)	Speed (Gb/s)	Support DDM (Yes/No)
XG-SFP-AOC1M	Active Fiber-Optic Cable	SFP+	1	\	10.3125	Yes
XG-SFP-AOC3M	Active Fiber-Optic Cable	SFP+	3	\	10.3125	Yes
XG-SFP-AOC5M	Active Fiber-Optic Cable	SFP+	5	\	10.3125	Yes

You just need to plug both ends of the SFP+ cable module into the corresponding ports of the switches respectively. No extra cable is required.

Table 7-9 Pairing Models of the 10-Gigabit BIDI Module

Speed/Distance	Paring Models
10-Gigabit/300 m	XG-SFP-SR-SM1270-BIDI XG-SFP-SR-SM1330-BIDI
10-Gigabit/10 km	XG-SFP-LR-SM1270-BIDI XG-SFP-LR-SM1330-BIDI

BIDI modules must be used in pairs. If XG-SFP-SR-SM1270-BIDI is used at one end, then XG-SFP-SR-SM1330-BIDI must be applied to the other end.

7.4 Lightening Protection

Installing AC Power Arrester (Lightning Protection Power Strip)

The AC power port must be connected to an external lightning protection power strip to prevent the switch from being struck by lightning when the AC power cord is introduced from the outdoor and directly connected to the power port of the switch. The lightning protection power strip can be fixed on the rack, workbench, or wall in the equipment room by using cable ties and screws. AC power enters the lightening protection power strip and then gets to the switch.

Figure 7-4 Power Arrester

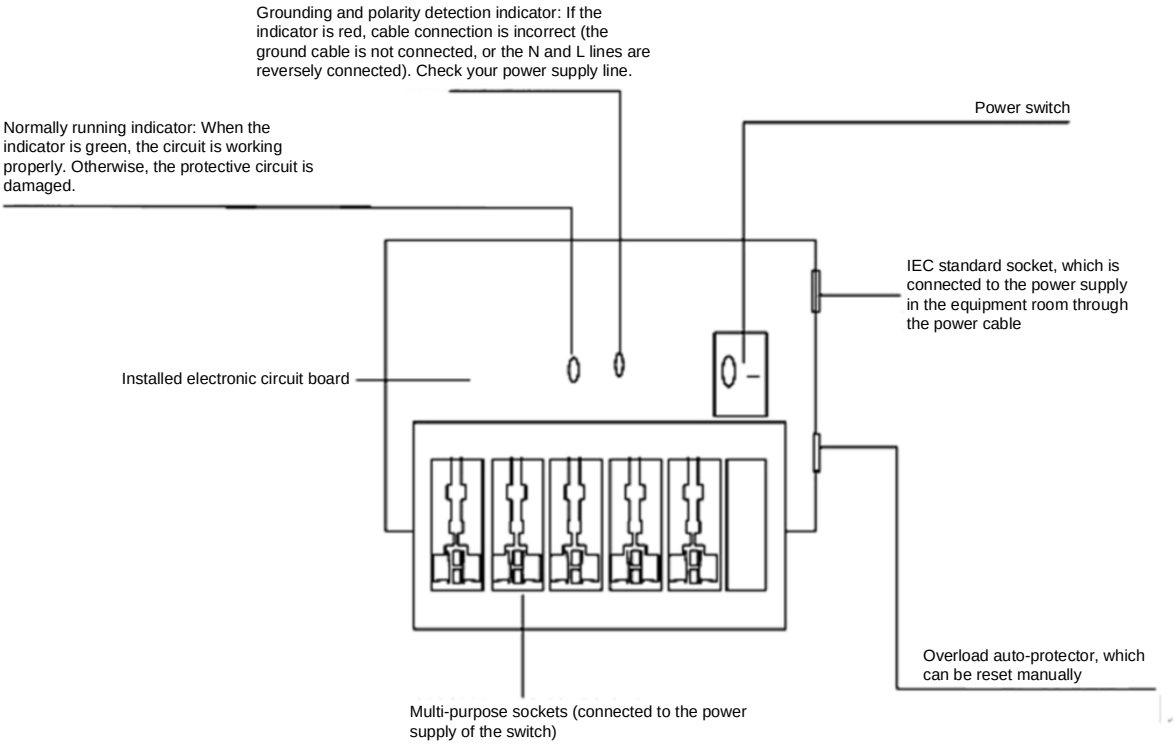

The power arrester is not delivered with the switch. Please purchase it based on actual requirements.

Make sure that the PE terminal of the power arrester is well grounded.

After the AC power plug of the switch is connected to the socket of the power arrester (lightning protection power strip), the lightning protection function is implemented only if the RUN indicator is green and the ALARM indicator is OFF.

If the ALARM indicator on the power arrester is red, check whether it is caused by poor grounding connection or by the reversed connection of the Null and Live lines. The detection method is as follows: Use a multimeter to measure the polarity of the power socket for the arrester when the indicator is red. If the N line is on the left and the L line is on the right (facing the socket), the arrester's PE terminal is not grounded. If not, the polarity of the arrester power cord should be reversed. In this case, you should open the power arrester and rectify the polarity of the connection. If the indicator is still red, the arrester's PE terminal has not been grounded.

Installing the Ethernet Port Arrester

Please connect an Ethernet port arrester to the switch to prevent the damage by lightning before connecting an outdoor Ethernet cable to the switch.

Tools: Phillips screwdrivers or flat-head screwdriver, multimeter, and diagonal pliers

Installation Steps:

1. Tear one side of the protective paper for the double-sided adhesive tape and paste the tape to the housing of the Ethernet port arrester. Tear the other side of the protective paper for the double-sided adhesive tape and paste the Ethernet port arrester to the switch housing. The paste position for the Ethernet port arrester should be as close to the ground terminal of the switch as possible.
2. Based on the distance between the switch ground terminal and the Ethernet port arrester, cut the ground cable for the Ethernet port arrester and firmly tighten the ground cable to the ground terminal of the switch.
3. Use a multimeter to check whether the ground cable for the arrester is in good contact with the ground terminal and the housing of the switch.
4. Connect the arrester by using an adapter cable (note that the external Ethernet cable is connected to the IN end, while the adapter cable connected to the switch is connected to the OUT end) and check whether the service module indicator is normal.
5. Use a nylon cable tie to bundle the power cords.

Figure 7-5 Ethernet Port Arrester Installation

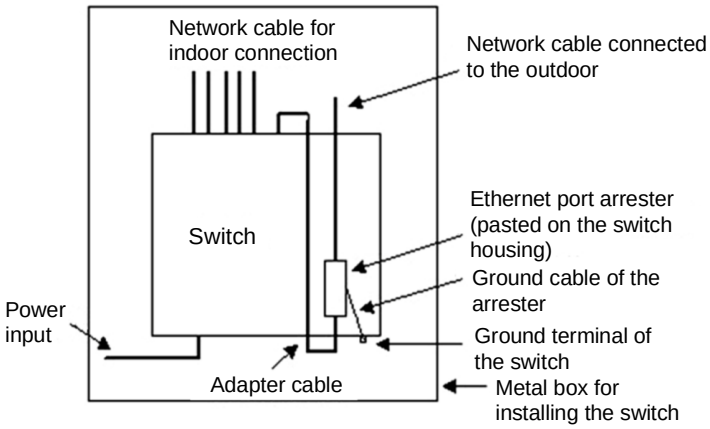

The Ethernet port arrester is only for the 10M/100M copper ports with an RJ-45 connector.

The Ethernet port arrester is not delivered with the switch. Please purchase it based on actual requirements.

Pay attention to the following conditions during the actual installation to avoid affecting the performance of the Ethernet port arrester:

- Reversed installation direction of the arrester. Connect the external Ethernet cable to the **IN** end and connect the Ethernet port of the switch to the **OUT** end.
- Poor grounding of the arrester. The ground cable of the arrester should be as short as possible to ensure that it is in good contact with the ground terminal of the switch. Use a multimeter to confirm the contact condition after the grounding.
- Incomplete arrester installation. If there is more than one port connected to the peer device on the switch, arresters need to be installed on all connection ports for the purpose of lightning protection.

7.5 Cabling

When the switch is installed in a standard 19-inch rack, secure the cables around the cable management brackets. Top cabling or bottom cabling is adopted according to the actual situation in the equipment room. All transferred cable connectors should be placed at the bottom of the rack in an orderly manner instead of outside the rack that is easy to touch. Power cords are routed beside the rack, and top cabling or bottom cabling is adopted according to the actual situation in the equipment room, such as the positions of the DC power distribution box, AC socket, or lightning protection box.

Requirements for Cable Bend Radius

- The bend radius of a fixed power cord, Ethernet cable, or flat cable should be over five times greater than their respective diameters. The bend radius of these cables that are often bent or plugged should be over seven times greater than their respective diameters.
- The bend radius of a fixed common coaxial cable should be over seven times greater than its diameter. The bend radius of the common coaxial cable that is often bent or plugged should be over 10 times greater than its diameter.
- The bend radius of a fixed high-speed cable (such as SFP+ cable) should be over five times greater than its diameter. The bend radius of the fixed high-speed cable that is often bent or plugged should be over10 times greater than its diameter.

Requirements for Fiber Bend Radius

- The diameter of a fiber tray to hold fibers should be over 25 times greater than the diameter of the fiber.
- When an optical fiber is moved, the bend radius of the fiber should be over 20 times greater than the diameter of the fiber.
- During cabling of an optical fiber, the bend radius of the fiber should be over 10 times greater than the diameter of the fiber.

Precautions for Bundling up Cables

- Before cables are bundled, mark labels and stick the labels to cables wherever appropriate.
- Cables should be neatly and properly bundled in the rack without twisting or bending.

Figure 7-6 Binding Cables (1)

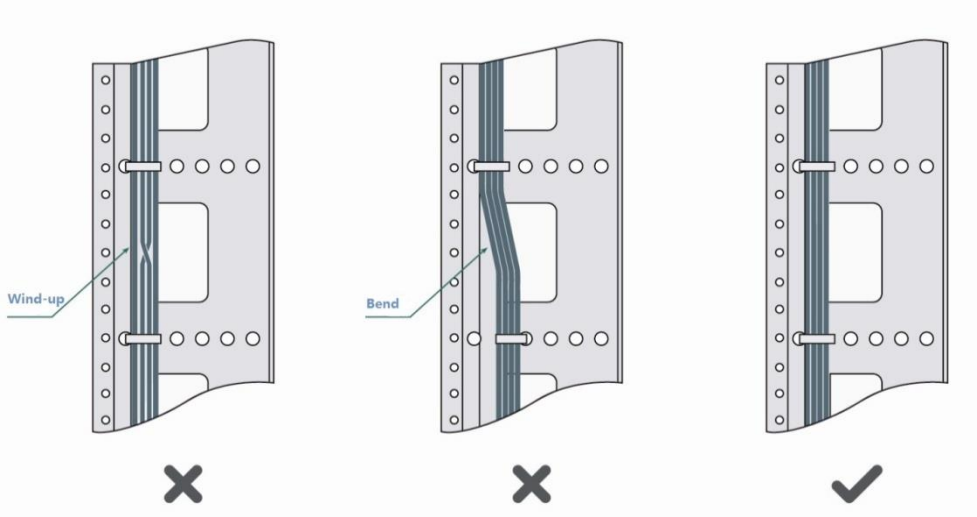

- Cables of different types (such as power cords, signal cables, and ground cables) should be separated in cabling and bundling. Mixed bundling is disallowed. When they are close to each other, it is recommended to adopt crossover cabling. In the case of parallel cabling, maintain a minimum distance of 30 mm (1.18 in.) between power cords and signal cables.
- The cable management brackets and cabling troughs inside and outside the rack should be smooth without sharp corners.

- The metal hole traversed by cables should have a smooth and fully rounding surface or an insulated lining.
- Use cable ties to bundle up cables properly. Please do not connect two or more cable ties to bundle up cables.
- After bundling up cables with cable ties, cut off the remaining part. The cut should be smooth and trim, without sharp corners.

Figure 7-7 Binding Cables (2)

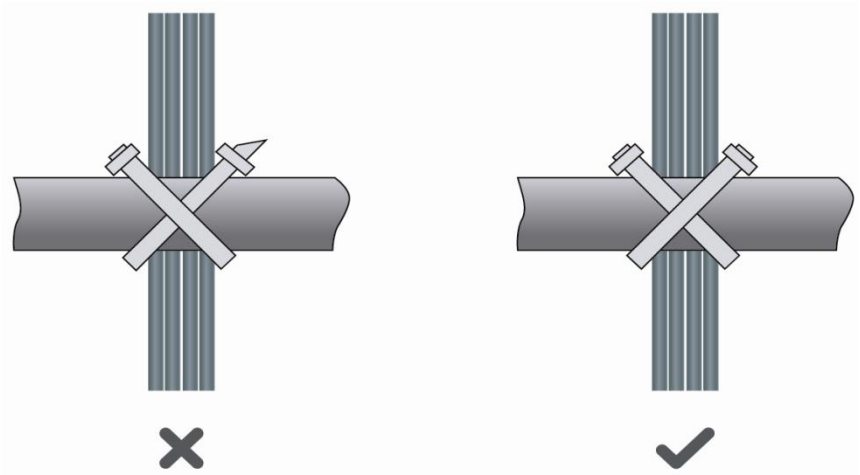

- When cables need to be bent, please bundle them up but do not tie them where the cables will be bent. When cables need to be bent, please bundle them up but do not tie them where the cables will be bent.

Figure 7-8 Binding Cables (3)

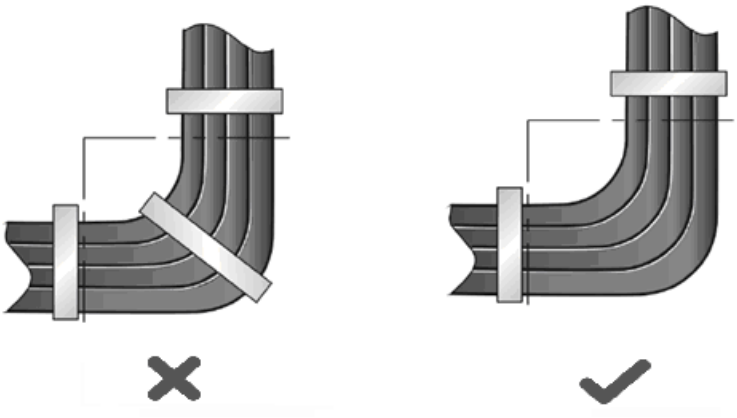

- Cables not to be assembled or remaining parts of cables should be folded and placed in a proper position of the rack or cable trough. The proper position refers to a position that does not affect device running or damage the switch or cable.
- 220 V and –48 V power cords must not be bundled on the guide rails of moving parts.
- The power cords connecting moving parts such as door grounding wires should be reserved with some access after being assembled to avoid suffering tension or stress. After the moving part is installed, the remaining cable part should not touch heat sources, sharp corners, or sharp edges. If heat sources cannot be avoided, high-temperature cables should be used. If heat sources cannot be avoided, high-temperature cables should be used.
- When screw threads are used to fasten cable terminals, the bolt or screw must be tightly fastened, and anti-loosening measures should be taken.

Figure 7-9 Cable Fastening

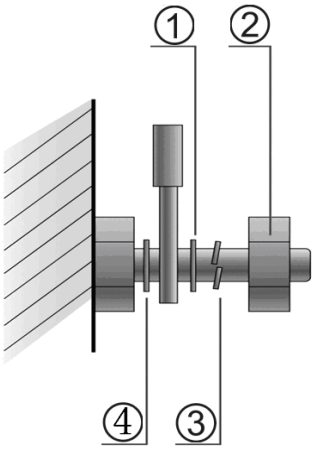

① Flat washer
② Nut
③ Spring washer
④ Flat washer

- Hard power cords should be fastened in the terminal connection area to prevent stress on terminal connection and cable.
- Do not use self-tapping screws to fasten terminals.
- Power cords of the same type and in the same cabling direction should be bundled up into cable bunches, with cables in cable bunches clean and straight.
- Bundle up cables by using cable ties.

Table 7-10 Bundle up Cables Using Cable Ties

Cable Bunch Diameter	Distance between Every Binding Point
10 mm (0.39 in.)	80 mm to 150 mm (3.15 in. to 5.91 in.)
10 mm to 30 mm (0.39 in. to 1.18 in.)	150 mm to 200 mm (5.91 in. to 7.87 in.)
30 mm (1.18 in.)	200 mm to 300 mm (7.87 in. to 11.81 in.)

- No knot is allowed in cabling or bundling.
- For wiring terminal blocks (such as circuit breakers) with cord end terminals, the metal part of the cord end terminal should not be exposed outside the terminal block when assembled.

7.6 Site Selection

- The equipment room should be at least 5 km away from heavy pollution sources, such as the smelter works, coal mine, and thermal power plant. The equipment room should be at least 3.7 km away from medium pollution sources, such as the chemical factory, rubber factory, and electroplating factory. The equipment room should be at least 2 km away from light pollution sources, such as the food factory and leather plant. If the pollution source is unavoidable, the machine room should be located on the windward side of the pollution source perennially with advanced protection.
- The equipment room should be at least 3.7 km away from the sea or salt lake. Otherwise, the equipment room must be sealed, with air conditioner installed for temperature control. Saline soil cannot be used for construction. Otherwise, you should select devices with advanced protection against severe environment.

- Do not build the equipment room in the proximity of livestock farms. Otherwise, the machine room should be located on the windward side of the pollution source perennially. The previous livestock house or fertilizer warehouse cannot be used as the machine room.
- The machine room should be firm enough to withstand severe weather conditions such as windstorm and heavy rain as well as away from dust. If the dust is unavoidable, keep the door and window away from the pollution source.
- Otherwise, the machine room should meet the construction standard in terms of noise.
- Make sure the air vent of the machine room is away from the sewage pipe, septic tank, and sewage treatment tank. Keep the machine room under positive pressure to prevent corrosive gas from entering the machine room to corrode components and circuit boards.
- Keep the machine room away from industrial boiler and heating boiler.
- The machine room should be on the second floor. Otherwise, the machine room floor should be 600 mm (23.62 in.) higher than the highest flood level ever recorded.
- Make sure there are no cracks or holes in the wall and floor. If there are cable entries in the wall or window, take proper sealing measures. Ensure that the wall is flat, wear-resistant, and dust-free, which should be up to the standard for flame retarding, soundproofing, heat absorption, dust reduction, and electromagnetic shielding.
- Keep the door and the window closed to make the machine room sealed.
- The steel door is recommended for soundproofing.
- Sulfur-containing materials are forbidden.
- Keep the air conditioner from blowing wind straight toward the device or blowing water drops from the window or air vent toward the device.