Ruijie RG-AP680-O(V3) Access Point

Hardware Installation and Reference Guide

Document Version: V1.0
Date: June 6, 2023
Copyright © 2023 Ruijie Networks

Copyright

Copyright © 2023 Ruijie Networks

All rights are reserved in this document and this statement.

Any reproduction, excerption, backup, modification, transmission, translation or commercial use of this document or any portion of this document, in any form or by any means, without the prior written consent of Ruijie Networks is prohibited.

Trademark Ruijie Networks 锐捷 and Ruijie are owned by Ruijie Networks.

All other trademarks or registered trademarks mentioned in this document are owned by their respective owners.

Disclaimer

The products, services, or features you purchase are subject to commercial contracts and terms. Some or all of the products, services or features described in this document may not be within the scope of your purchase or use. Unless otherwise agreed in the contract, Ruijie Networks does not make any express or implied statement or guarantee for the content of this document.

Due to product version upgrades or other reasons, the content of this document will be updated from time to time. Ruijie Networks reserves the right to modify the content of the document without any notice or prompt.

This manual is for reference only. Ruijie Networks endeavors to ensure content accuracy and will not shoulder any responsibility for losses and damages caused due to content omissions, inaccuracies or errors.

Preface

Intended Audience

This document is intended for:

- Network engineers
- Technical support and servicing engineers
- Network administrators

Technical Support

- Ruijie Networks website: https://www.ruijienetworks.com/
- Technical support website: https://ruijienetworks.com/support
- Case portal: https://caseportal.ruijienetworks.com
- Community: https://community.ruijienetworks.com
- Technical support Email: service_rj@ruijienetworks.com
- Live Chat: https://www.ruijienetworks.com/rita

Conventions

1. Signs

The signs used in this document are described as follows:

Warning

An alert that calls attention to important rules and information that if not understood or followed can result in data loss or equipment damage.

Caution

An alert that calls attention to essential information that if not understood or followed can result in function failure or performance degradation.

Note

An alert that contains additional or supplementary information that if not understood or followed will not lead to serious consequences.

Specification

An alert that contains a description of product or version support.

2. Note

The manual offers configuration information (including model, port type and command line interface) for indicative purpose only. In case of any discrepancy or inconsistency between the manual and the actual version, the actual version prevails.

Contents

Preface 1-1

1 Product Overview 1

1.1 About the RG-AP680-O(V3) Access Point 1

1.2 Hardware Features 1

1.3 Package Contents 3

1.4 Technical Specifications 4

1.4.1 Dimensions and Weight 4

1.4.2 RF Specifications 4

1.4.3 Port Specifications 5

1.4.4 Power Supply and Consumption 6

1.4.5 Environment and Reliability 6

1.5 LED and Button 7

1.6 Optical Module 8

2 Preparing for Installation 10

2.1 Safety Precautions 10

2.1.1 General Safety Precautions 10

2.1.2 Handling Safety 10

2.1.3 Electric Safety 10

2.1.4 Storage Security 11

2.2 Installation Environment Requirements 11

2.2.1 Bearing Requirements 11

2.2.2 Ventilation Requirements 11

2.2.3 Space Requirements 11

2.2.4 Temperature/Humidity Requirements 11

2.2.5 Cleanness Requirements 12

2.2.6 System Grounding Requirements 13

2.2.7 Anti-interference Requirements 13

2.2.8 Lightning Protection Requirements 13

2.2.9 Waterproof Requirements 13

2.2.10 Other Requirements 14

2.3 Tools 14

3 Installing the Access Point 15

3.1 Installation Flowchart 15

3.2 Before You Begin 16

3.3 Precautions 17

3.4 Installing the Access Point 17

3.4.2 Mounting the Access Point on a Pole 18

3.4.3 Mounting the Access Point on a Ceiling 21

3.4.4 Removing the Access Point 24

3.5 Installing an Optical Module 24

3.6 Installing the Cables 24

3.6.1 Installing the Grounding Cable 24

3.6.2 Installing the Ethernet Cable 25

3.6.3 Installing the Fiber-Optic Cable 26

3.6.4 Installing the Power Cord 27

3.7 Bundling Cables 27

3.7.1 Precautions 27

3.7.2 Bundling Description 27
3.8 Checklist After Installation 28
3.8.1 Checking the Access Point 28
3.8.2 Checking Cable Connection 28
3.8.3 Checking the Power Supply 28
4 Verifying Operating Status 29
4.1 Setting up Configuration Environment 29
4.2 Powering on the Access Point 29
4.2.1 Checklist Before Power-on 29
4.2.2 Checklist After Power-on (Recommended) 29
5 Monitoring and Maintenance 30
5.1 Monitoring 30
5.1.1 LED 30
5.1.2 CLI Commands 30
5.2 Remote Maintenance 30
5.3 Hardware Maintenance 30
6 Common Troubleshooting 31
6.1 General Troubleshooting Flowchart 31
6.2 Common Faults 31
6.2.1 Ethernet Port Is Not Working After the Ethernet Cable Is Plugged In 31
6.2.2 LED Is Off for a Long Time 31
6.2.3 LED Is Steady Red 31
6.2.4 LED Is Steady Green 32
6.2.5 LED Keeps Blinking Blue at an Interval of 0.2s (in Fit Mode) 32

6.2.6 LED Does Not Turn Steady Blue or Blinking Blue 32

6.2.7 Clients Can Not Find the Access Point 32

7 Appendix 33

7.1 Connectors and Media 33

7.2 Cabling 35

7.3 Optical Modules and Specifications 38

7.4 DC Connector Specifications 38

1 Product Overview

1.1 About the RG-AP680-O(V3) Access Point

The RG-AP680-O(V3) is a dual-radio and dual-stream access point designed to cover outdoor areas. Compliant with the IEEE 802.11ax standard, the access point delivers a combined data rate of 2.975 Gbps, with up to 575 Mbps in the 2.4 GHz band and 2.4 Gbps in the 5 GHz band. The access point provides one 2.5 GE SFP port and one 1GE electrical port.

1.2 Hardware Features

The RG-AP680-O(V3) access point provides two radio frequency (RF) connectors, one 10/100/1000 BASE-T Ethernet port with auto-negotiation, one 2.5GE SFP port, one Console port, and one DC connector. The access point can be powered by either PoE or DC power supply.

Figure 1-1 Front View of Access Point

Figure 1-2 Top View of Access Point

Figure 1-3 Side View of Access Point

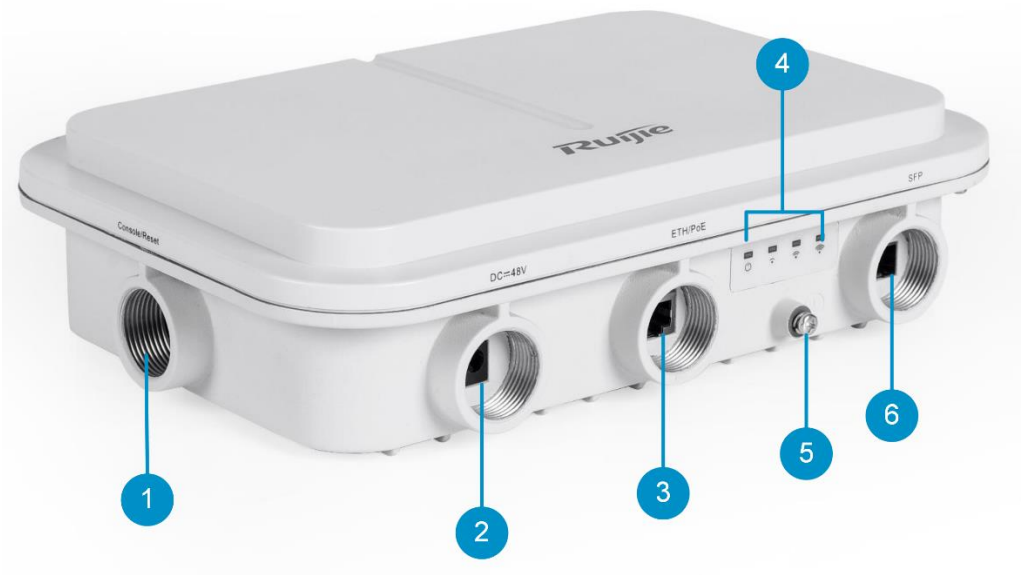

Table 1-1 Button and Ports

No.	Item	Description
1	Console/Reset	The console port is used to manage devices. The reset button is used to restart the access point or restore the access point to factory settings.
2	DC Connector	Connected to the DC power supply
3	Ethernet/PoE Port	Uplink service port for data transmission, compliant with the IEEE 802.3af/at standard
4	LED	Indicates the system status, including one system status LED and three RSSI LEDs
5	Grounding Screw	Secures the grounding cable
6	SFP Port	Uplink service port for data transmission

Note

The nameplate is at the bottom of the access point.

1.3 Package Contents

Table 1-2 Package Contents

Item	Quantity
RG-AP680-O(V3) Access Point	1
Mounting Plate Assembly (Including a mounting plate and a mounting arm)	1
Mounting Bracket	1
M5 Screw	4
M8 Screw	2
M6 x 50 mm Expansion Anchor	4
Hose Clamp	2
Cable Gland for Ethernet Cable	2
Cable Gland for Fiber-Optic Cable	1
Dust Cap	3
Grounding Cable	1
Warranty Card	1

Item	Quantity
Hardware Installation and Reference Guide	1

1.4 Technical Specifications

1.4.1 Dimensions and Weight

Table 1-3 Dimensions and Weight

Dimensions and Weight	RG-AP680-O(V3)
Physical Dimensions (W × D × H)	Access point: 251 mm × 168 mm × 64 mm (9.88 in. x 6.61 in. x 2.52 in.) Mounting plate assembly: 130 mm × 231 mm × 39 mm (5.12 in. x 9.09 in. x 1.54 in.) Mounting bracket: 120 mm × 124 mm × 43 mm (4.72 in. x 4.88 in. x 1.69 in.)
Weight	Access point: 1.0 kg (2.20 lbs.) Mounting plate assembly: 0.6 kg (1.32 lbs.) Mounting bracket: 0.3 kg (0.66 lbs.)
Installation	Ceil mounting and pole mounting
Lock Option	Not supported
Mounting Bracket Dimensions (W × D × H)	Mounting plate assembly: 100 mm × 100 mm (3.94 in. x 3.94 in.) Mounting bracket: 65 mm × 105 mm (2.56 in. x 4.13 in.)
Mounting Hole Diameter	Mounting plate assembly: 7 mm (0.28 in.) Mounting bracket: 9 mm (0.35 in.)
Mounting Pole Pattern	50 mm to 140 mm (1.97 in. x 5.51 in.)

1.4.2 Radio Specifications

Table 1-4 Radio Specifications

Radio Specifications	RG-AP680-O(V3)
Radio Design	Dual-radio Up to four spatial streams Radio 1: 2.4 GHz, 2 spatial streams: 2 x 2, MU-MIMO Radio 2: 5 GHz, 2 spatial streams: 2 x 2, MU-MIMO
Operating Radio	Radio1: 802.11b/g/n/ax, 2.400 GHz to 2.483 GHz

Radio Specifications	RG-AP680-O(V3)
	Radio2: 802.11a/n/ac/ax, 5.150 GHz to 5.350 GHz, 5.470GHz ~ 5.850GHz Note: The operating radio is country-specific.
Max. Data Rate	2.4 GHz: 574 Mbps 5 GHz: 2.4 Gbps Combined: 2.975 Gbps
Antenna Type	Built-in smart antennas
Antenna Gain	2.4 GHz: 4 dBi 5 GHz: 6 dBi
Max. Transmit Power	28 dBm Note: The transmit power is country-specific.
Power Adjustment	Configurable in increments of 1 dBm
Modulation	802.11b: BPSK, QPSK, CCK 802.11a/g/n: BPSK, QPSK, 16-QAM, 64-QAM, 256-QAM 802.11ac: BPSK, QPSK, 16-QAM, 64-QAM, 256-QAM, 1024-QAM 802.11ax: BPSK, QPSK, 16-QAM, 64-QAM, 256-QAM, 1024-QAM
Receive Sensitivity	802.11b: –91 dBm (1 Mbps), –88 dBm (5 Mbps), –85 dBm (11 Mbps) 802.11a/g: –89 dBm (6Mbps), –80 dBm (24Mbps), –76 dBm (36Mbps), –71 dBm (54Mbps) 802.11n: –83 dBm@MCS0, –65 dBm@MCS7, –83 dBm@MCS8, –65 dBm@MCS15 802.11ac HT20: –83 dBm (MCS0), –57 dBm (MCS9) 802.11ac HT40: –79 dBm (MCS0), –57 dBm (MCS9) 802.11ac HT80: –76 dBm (MCS0), –51 dBm (MCS9) 802.11ax HE80: –76 dBm (MCS0), –49 dBm (MCS11) 802.11ax HE160: –45 dBm (MCS10), –43 dBm (MCS11)

1.4.3 Port Specifications

Table 1-5 Port Specifications

Port Specifications	RG-AP680-O(V3)
Bluetooth	Bluetooth 5.0

Fixed Service Port	Uplink: One 10/100/1000Base-T Ethernet port with auto-negotiation, IEEE 802.3af/at-compliant One 2.5GE SFP port, compatible with 1GE SFP
Fixed Management Port	One RJ45 console port
Status LED	One system status LED Three RSSI LEDs
Button	One Reset button

1.4.4 Power Supply and Consumption

Table 1-6 Power Supply and Consumption

Power Supply and Consumption	RG-AP680-O(V3)
Input Power Supply	1. DC power supply (48 V/0.35 A) 2. PoE/PoE+ power supply (IEEE 802.3af/at-compliant)
Max. Power Consumption	12.95 W

Caution

- If the access point is powered by PoE power supply, make sure that the power sourcing equipment (PSE) is 802.3af-capable.
- The access point adopts a fan-free design. Therefore, maintain sufficient clearance around the access point for air circulation.

1.4.5 Environment and Reliability

Table 1-7 Standard Compliance

Environment and Reliability	RG-AP680-O(V3)
Temperature	Working temperature: –10°C to +65°C (14°F to 149°F) Storage temperature: –40°C to +85°C (–40°F to +185°F) At an altitude ranging from 3000 m to 5000 m (9842.52 ft. to 16404.20 ft.), every time the altitude increases by 220 m (656.17 ft.), the maximum temperature decreases by 1°C (1.8°F).

Environment and Reliability	RG-AP680-O(V3)
Humidity	Operating humidity: 0% to 100% RH (non-condensing) Storage humidity: 0% to 100% RH (non-condensing)
IP Rating	IP68
Anti-corrosion Rating	24 Days
Safety Standard	GB 4943.1, IEC 60950-1, IEC 60825-1
EMC Standard	EN 300386, GB/T 19286, GB/T 17618

1.5 LED and Button

Note

The LED description applies to both fit and fat modes unless otherwise specified.

Table 1-8 LED Status

Status	Frequency	Description
Off	N/A	The access point is not powered on. The access point is powered on, but the LED is manually turned off.
Steady green	N/A	The software system of the access point is being initialized.
Steady red	N/A	The system is running properly, but the uplink service port is linked down.
Blinking red at an interval of 1s	On for 3s Off for 1s	In fit mode, the setup of a CAPWAP tunnel between the access point and wireless controller timed out.
Blinking blue at an interval of 0.2s	On for 0.2s Off for 0.2s	In fit or MACC mode, the software system of the AP is being updated.
Steady blue	N/A	The system is running properly, but there is no STA online.
Blinking blue at an interval of 1s	On for 1s Off for 1s	The system is running properly and there are one or more STAs online.
Blinking red at an interval of 0.2s	On for 0.2s Off for 0.2s	In fit mode, the access point is being located.

Table 1-9 Reset Button

Button	Operation	Result
Reset button	Press and hold the button for less than 2 seconds.	Restart the access point.
	Press and hold the button for more than 5 seconds.	Restore the access point to factory settings.

Table 1-10 RSSI LEDs

LED Color	No. of Steady-on LEDs	Description
N/A	N/A	The bridge function is disabled on the access point. The bridge function is disabled on the access point, but bridging fails.
Green	1	Bridging is successful, and the strength of the wireless signals dedicated for bridging is smaller than –70 dBm.
Green	1, 2	Bridging is successful, and the strength of the wireless signals dedicated for bridging ranges from –70 dBm to –50 dBm.
Green	1, 2, 3	Bridging is successful, and the strength of the wireless signals dedicated for bridging is greater than –50 dBm.

1.6 Optical Module

The type of the port on the device directly connected with the 10GE SFP port on the access point can be an optical port or electrical port. However, the negotiation rate is subject to the port rate or optical module used on both devices. For details, see Table 1-11 and Table 1-12.

Table 1-11 Rate Negotiation for an Optical Port on the Peer Device

Optical Port Rate of Access Point	Optical Module Rate	Negotiation Rate Supported by the Port on the Peer Device		
		1 Gbps	1 Gbps/10 Gbps/Auto Negotiation	1 Gbps/2.5 Gbps/10 Gbps/Auto Negotiation
2.5 Gbps	2.5 Gbps	Not supported	Not supported	2.5 Gbps
1 Gbps	1 Gbps	1 Gbps	1 Gbps	1 Gbps

Table 1-12 Rate Negotiation for an Electrical Port on the Peer Device

Optical Port Rate of Access Point	O/E Conversion Module Rate	Negotiation Rate Supported by the Port on the Peer Device		
		1 Gbps	1 Gbps/10 Gbps/Auto Negotiation	1 Gbps/2.5 Gbps/10 Gbps/Auto Negotiation
1 Gbps	1 Gbps	1 Gbps	1 Gbps	1 Gbps
2.5 Gbps	10 Gbps	1 Gbps	1 Gbps	2.5 Gbps

2 Preparing for Installation

2.1 Safety Precautions

Note

- To avoid personal injury and device damage, carefully read the safety precautions before you install the device.
- The following safety precautions may not cover all possible dangers.

2.1.1 General Safety Precautions

- Do not expose the access point to high temperature, dusts, or harmful gases. Do not install the access point in an inflammable or explosive environment. Keep the access point away from EMI sources such as large radar stations, radio stations, and substations. Do not subject the access point to unstable voltage, vibration, and noises.
- The installation site should be free from water flooding, seepage, dripping, or condensation. The installation site should be selected according to network planning, communications equipment features, and considerations such as climate, hydrology, geology, earthquake, electrical power, and transportation.
- The installation site should be dry. It is not recommended that the access point be installed in a place near the sea. Keep the device at least 500 meters away from the ocean and do not face it towards the sea breeze.
- Do not place the device in walking areas.
- During the installation and maintenance, do not wear loose clothes, ornaments, or any other things that may be hooked by the chassis.
- Keep tools and components away from walking areas.

2.1.2 Handling Safety

- Prevent the access point from being frequently handled.
- Cut off all the power supplies and unplug all power cords before moving or handling the device.

2.1.3 Electric Safety

Warning

- Improper or incorrect electric operations may cause a fire, electric shock, and other accidents, and lead to severe and fatal personal injury and device damage.
- Direct or indirect contact with high voltage or mains power supply via wet objects may cause fatal dangers.

- Observe local regulations and specifications during electric operations. Only personnel with relevant qualifications can perform such operations.
- Check whether there are potential risks in the work area. For example, check whether the ground is wet.

- Find the position of the indoor emergency power switch before installation. Cut off the power switch in case of accidents.
- Check the access point carefully for confirmation before shutting down the power supply.
- Do not place the device in a damp/wet location. Do not let any liquid enter the chassis.
- Keep the access point far away from grounding or lightning protection devices for power equipment.
- Keep the access point away from radio stations, radar stations, high-frequency high-current devices, and microwave ovens.

2.1.4 Storage Security

For proper working of the access point, the access point must be stored in an environment based on the storage temperature/humidity requirements in Specifications.

Caution

If the access point is stored for more than 18 months, power on the access point and run it for consecutive 24 hours to activate the access point.

2.2 Installation Environment Requirements

2.2.1 Bearing Requirements

Evaluate the weight of the device and its accessories (such as the bracket, pole and power supply module), and ensure that the ground of the installation site meets the requirements.

2.2.2 Ventilation Requirements

Reserve sufficient space in front of the air vents to ensure normal heat dissipation. After various cables are connected, bundle the cables or place them in the cable management bracket to avoid blocking air inlets.

2.2.3 Space Requirements

Maintain a minimum clearance of 0.4 m (15.75 in.) around the device to ensure proper cooling and ventilation.

2.2.4 Temperature/Humidity Requirements

To ensure normal operation and a prolonged service life of the access point, maintain an appropriate temperature and humidity in the installation environment.

The installation environment with too high or too low temperature and humidity for a long period of time may damage the access point.

- In an environment with high relative humidity, the insulating material may have bad insulation or even leak electricity.
- In an environment with low relative humidity, the insulating strip may dry and shrink, loosening screws.
- In a dry environment, static electricity is prone to occur and damage the internal circuits of the access point.
- Too high temperatures can accelerate the aging of insulation materials, greatly reducing the reliability of the access point and severely affecting its service life.

Note

The ambient temperature and humidity of the device are measured at the point that is 1.5 m (59.06 in.) above the floor and 0.4 m (15.75 in.) before the device when there is no protective plate in front or at the back of the device.

2.2.5 Cleanness Requirements

Dust poses the top threat to the running of the device. The indoor dust falling on the device may be adhered by the static electricity, causing poor contact of the metallic joint. Such electrostatic adherence may occur more easily when the relative humidity is low, not only affecting the service life of the device, but also causing communication faults. The following table shows the requirements for the dust content and granularity in the equipment room.

Table 2-1 Requirements for Dust

Dust	Unit	Content
Dust particles (diameter ≤ 0.5 μm)	Particles/m^3	≤ 1.4×10^7
Dust particles (0.5 μm ≤ diameter ≤ 1 μm)	Particles/m^3	≤ 7×10^5
Dust particles (1 μm ≤ diameter ≤ 3 μm)	Particles/m^3	≤ 2.4×10^5
Dust particles (3 μm ≤ diameter ≤ 5 μm)	Particles/m^3	≤ 1.3×10^5

Apart from dust, the salt, acid and sulfide in the air in the equipment room must also meet strict requirements; as such poisonous substances may accelerate the corrosion of the metal and the aging of some parts. The equipment room should be protected from the intrusion of harmful gases (for example, SO_2, H_2S, NO_2, NH_3, and Cl_2), whose requirements are listed in the following table.

Table 2-2 Requirements for Gases

Gas	Average (mg/m^3)	Maximum (mg/m^3)
Sulfur dioxide (SO_2)	0.2	1.5
Hydrogen sulfide (H_2S)	0.006	0.03
Nitrogen dioxide (NO_2)	0.04	0.15
Ammonia gas (NH_3)	0.05	0.15
Chlorine gas (Cl_2)	0.01	0.3

Note

The **Average** refers to the average value of harmful gas in one week. The **Maximum** value is the upper limit of the harmful gas in one week, and maximum value can last for up to 30 minutes every day.

2.2.6 System Grounding Requirements

A good grounding system is the basis for the stable and reliable operation of the RG-S6510-48VS8CQ-X. It is the key to prevent lightning stroke and resist interference. Please carefully check the grounding conditions on the installation site according to the grounding requirements, and perform grounding properly as needed.

Safety Grounding

The cabinet and power distribution device must be connected to the ground. Otherwise, when the insulation resistance between the chassis and the power supply inside the device decreases, an electric shock may occur.

Caution

The building installation shall provide a means for connection to protective earth, and the device is to be connected to that means.

Lightning Grounding

The lightning protection system of the facility is an independent system that consists of the lightning rod, down lead conductor and the connector to the grounding system, which usually shares the power reference ground and yellow/green safety cable ground. The lightning discharge ground is for the facility only, not for the device.

EMC Grounding

The ground required for EMC design includes shielding ground, filter ground, noise and interference suppression, and level reference. The grounding resistance should be less than 1Ω. Make sure that the grounding lug of the cabinet is connected to the ground before powering on the access point.

2.2.7 Anti-interference Requirements

- Take interference prevention measures for the power supply system.
- Keep the access point away from the grounding equipment or lightning and grounding equipment of the power device as much as possible.
- Keep the access point far away from high-frequency current devices such as the high-power radio transmitting station and radar launcher.
- Take electromagnetic shielding measures when necessary.

2.2.8 Lightning Protection Requirements

The RG-AP680-O(V3) can guard against lightning strikes. As an electric device, too strong lightning strikes may still damage the device. Take the following lightning protection measures:

- Ensure that the neutral point of the AC power socket is in good contact with the ground.
- It is recommended that you install a power lightning arrester in front of the power input end to enhance the lightning prevention for the power supply.

2.2.9 Waterproof Requirements

Cap unused ports to ensure waterproof.

Figure 2-1 Dust Cap

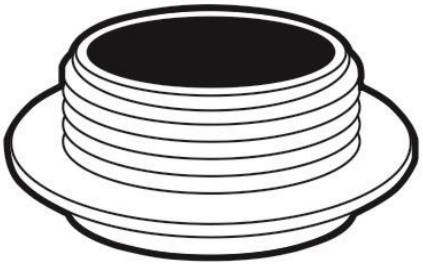

Connect the network cable, optical fiber jumper, and DC power cable to the access point after they pass through the corresponding waterproof plugs to ensure waterproof.

2.2.10 Other Requirements

Regardless of whether the device is installed on the wall or pole, the following conditions must be met:

- Sufficient space is reserved at the air inlet and air vents of the device, to facilitate heat dissipation of the device.
- The installation site allows for proper cooling and ventilation.
- The installation side is sturdy enough to support the weight of the device and its accessories.
- The access point is properly grounded.

2.3 Tools

Table 2-3 Tools

Common tools	Cross screwdriver, Ethernet cables and optical fibers, screws, diagonal plier, and cable ties
Special tools	Anti-static wrist strap, stripping plier, crimping plier, and wire cutter
Meters	Multimeter and bit error rate tester (BERT)
Other tools	PC, display, and keyboard

Note

The RG-AP680-O(V3) is delivered without a tool kit. The tool kit is customer-supplied.

3 Installing the Access Point

The RG-AP680-O(V3) access point must be installed at a fixed position.

Caution

Before installing the device, make sure that you have carefully read the requirements described in Chapter 2.

3.1 Installation Flowchart

Figure 3-1 Installation Flowchart

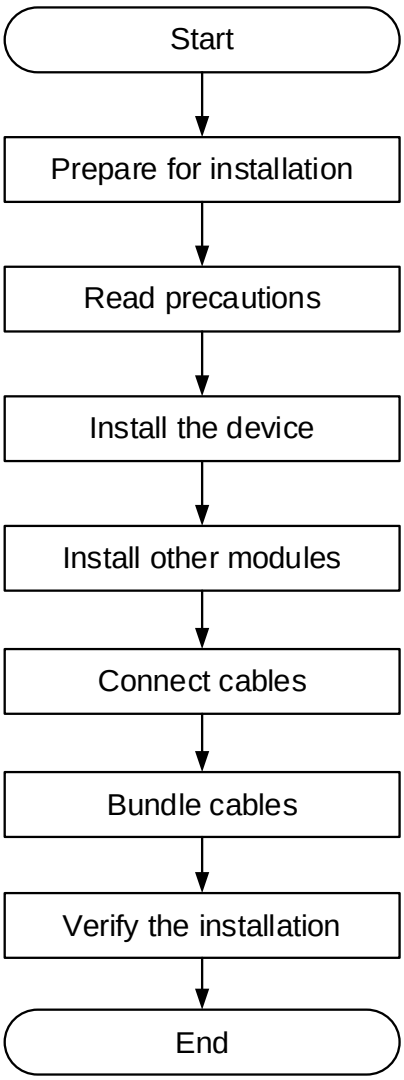

3.2 Before You Begin

Carefully plan and arrange the installation location, networking mode, power supply, and cabling before installing the device.

Confirm the following requirements before installation:

- The installation location provides sufficient space for heat dissipation.
- The installation location meets the temperature and humidity requirements of the device.
- The power supply and required current are available in the installation location.
- The Ethernet cables have been deployed in the installation location.
- The selected power supply meets the system power requirements.
- The position of the emergency power switch is found before installation, so that the power switch can be cut off in case of accidents.
- The diameter range of the pole to which the device is to be mounted meets the parameter value requirements in the specifications.
- For the ceiling-mounted access point, the mounting bracket dimensions, mounting hole pattern, and mounting hole diameter should meet the requirements in the following figure.

Figure 3-2 Dimensions of Mounting Plate Assembly

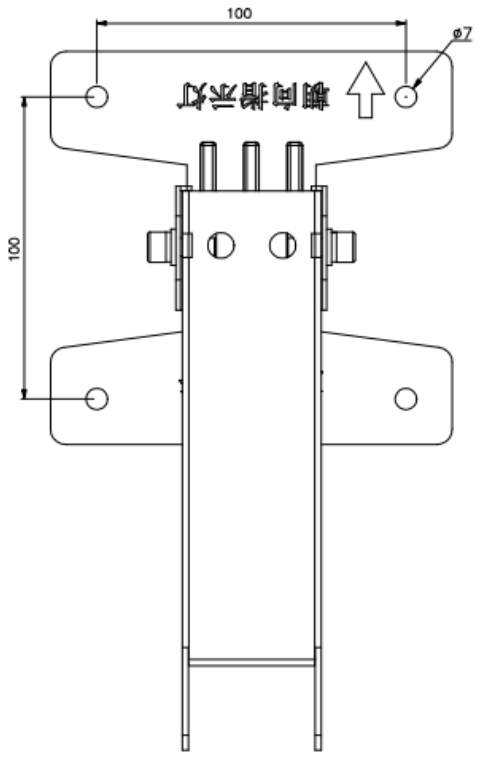

- For the pole-mounted access point, the pole diameter should meet the specified requirement.

Figure 3-3 Dimensions of Mounting Bracket

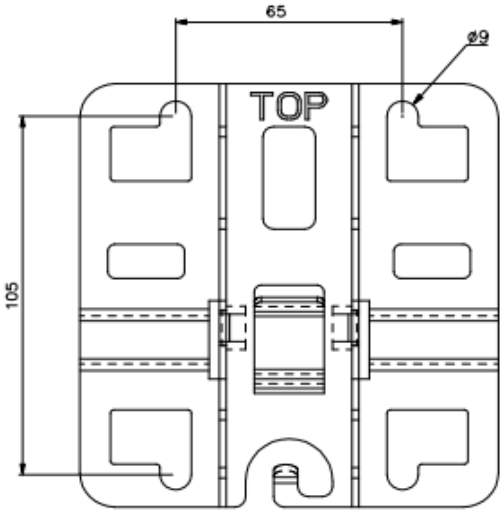

3.3 Precautions

To ensure the normal operation and prolonged service life of the access point, observe the following safety precautions:

- Do not power on the device during installation.
- Place the device in a well-ventilated environment.
- Do not subject the device to high temperatures.
- Keep the device away from high-voltage power cables.
- Install the access point indoors.
- Do not expose the device in a thunderstorm or strong electric field.
- Keep the device clean and dust-free.
- Cut off the power switch before cleaning the device.
- Do not wipe the device with a damp cloth.
- Do not wash the device with liquid.
- Do not open the enclosure when the device is working.
- Fasten the device tightly.

3.4 Installing the Access Point

The access point can be installed on a pole or ceiling. To get the optimal Wi-Fi coverage, keep the front panel of the access point parallel to the ground. You are advised to mount the access point horizontally at a height ranging from 3 m (9.84 ft.) to 5 m (16.40 ft.) above the ground. In an ideal environment, the coverage area of the access point is elliptical, with a major axis of 100 m (328.08 ft.) and a minor axis of 50 m (164.04 ft.). The deployment of the access point is subject to the actual environment. For areas with severe environmental interference, you are advised to reduce the distance between the two access points to improve the Wi-Fi coverage in the edge area.

Figure 3-4 Wi-Fi Coverage of Access Point

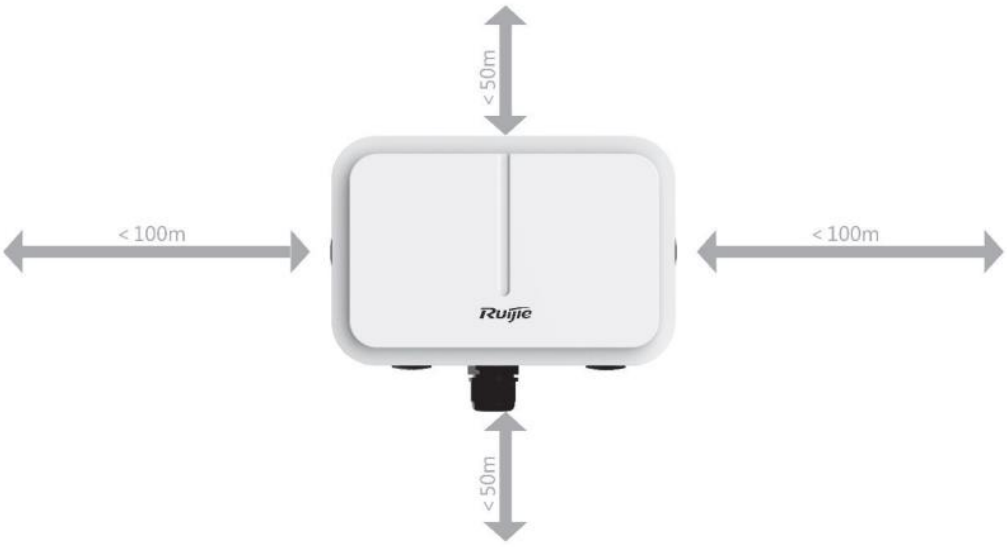

3.4.2 Mounting the Access Point on a Pole

(1) Secure the mounting plate assembly to the bottom of the RG-AP680-O(V3) access point using four M5 screws.

Figure 3-5 Securing Mounting Plate Assembly to Access Point

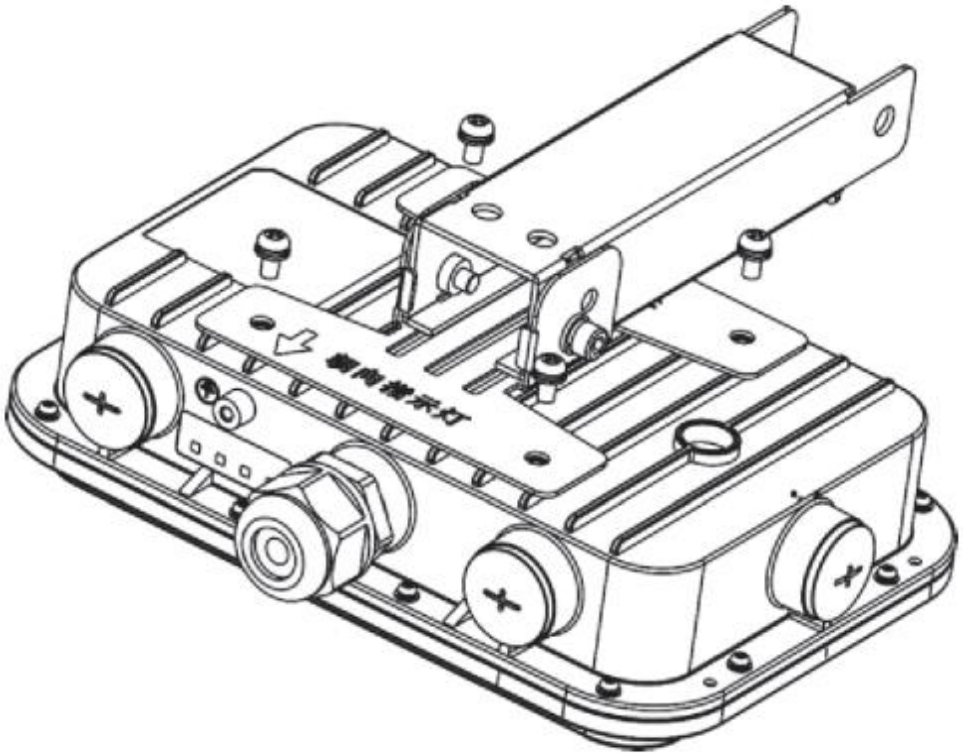

(2) Secure the mounting bracket to a pole.

- Vertical pole mounting: Secure the mounting bracket to a vertical pole by threading two hose clamps through the square holes of the mounting bracket. Keep the part of the bracket noted by **TOP** on top.

Figure 3-6 Securing Mounting Bracket to Vertical Pole

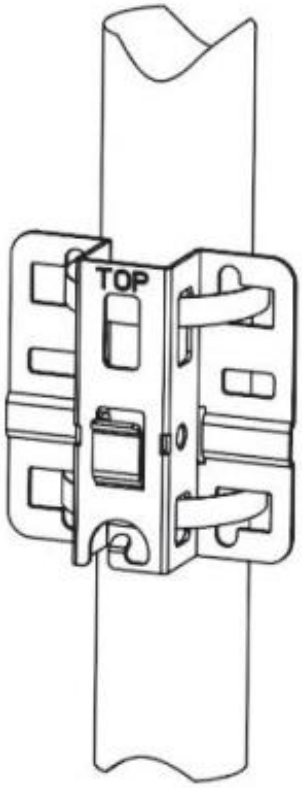

- Horizontal pole mounting: Secure the mounting bracket to a horizontal pole by threading two hose clamps through the square holes of the mounting bracket. Keep the part of the bracket noted by **TOP** on top.

Figure 3-7 Securing Mounting Bracket to Horizontal Pole

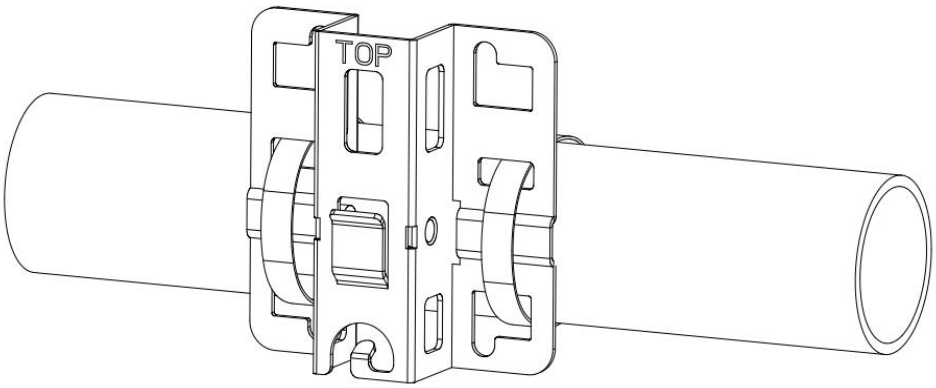

(3) Position the mounting arm on the mounting bracket with its two holes aligned to the screw holes on the mounting bracket.

Figure 3-8 Positioning Mounting Arm on Mounting Bracket

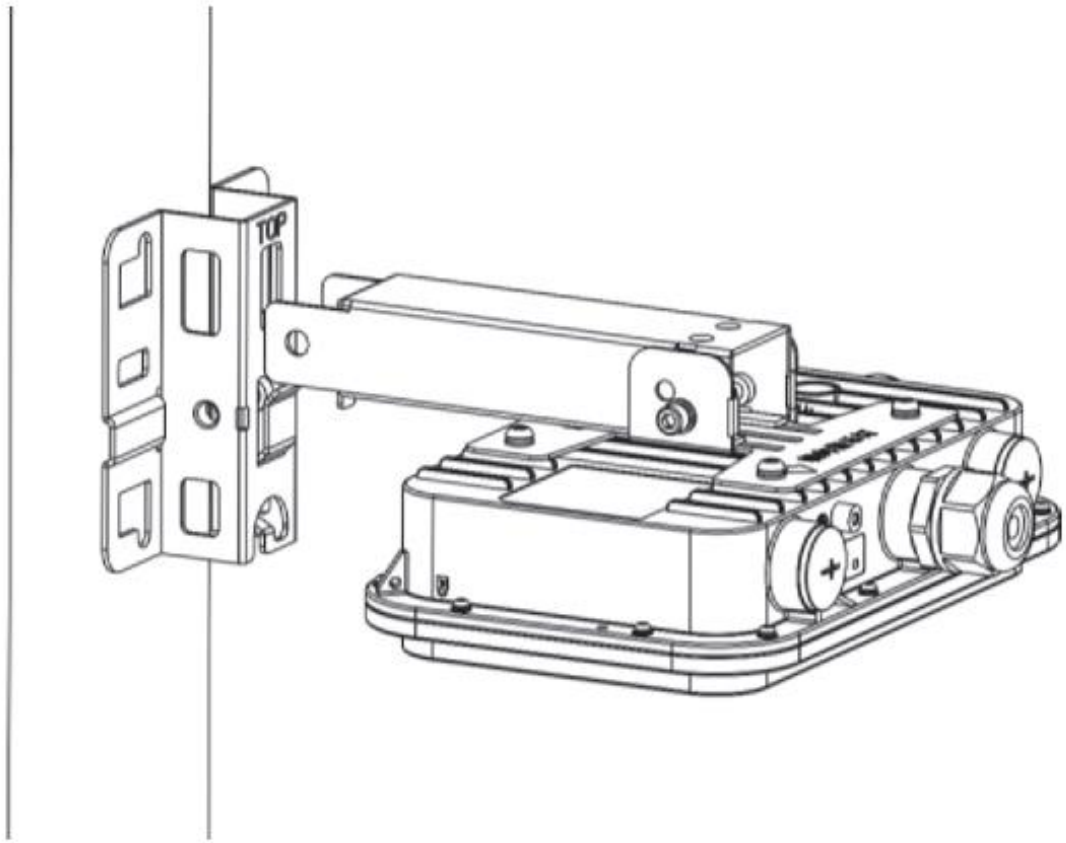

(4) Use two M8 screws to secure the mounting arm to the mounting bracket.

Figure 3-9 Securing Mounting Arm to Mounting Bracket

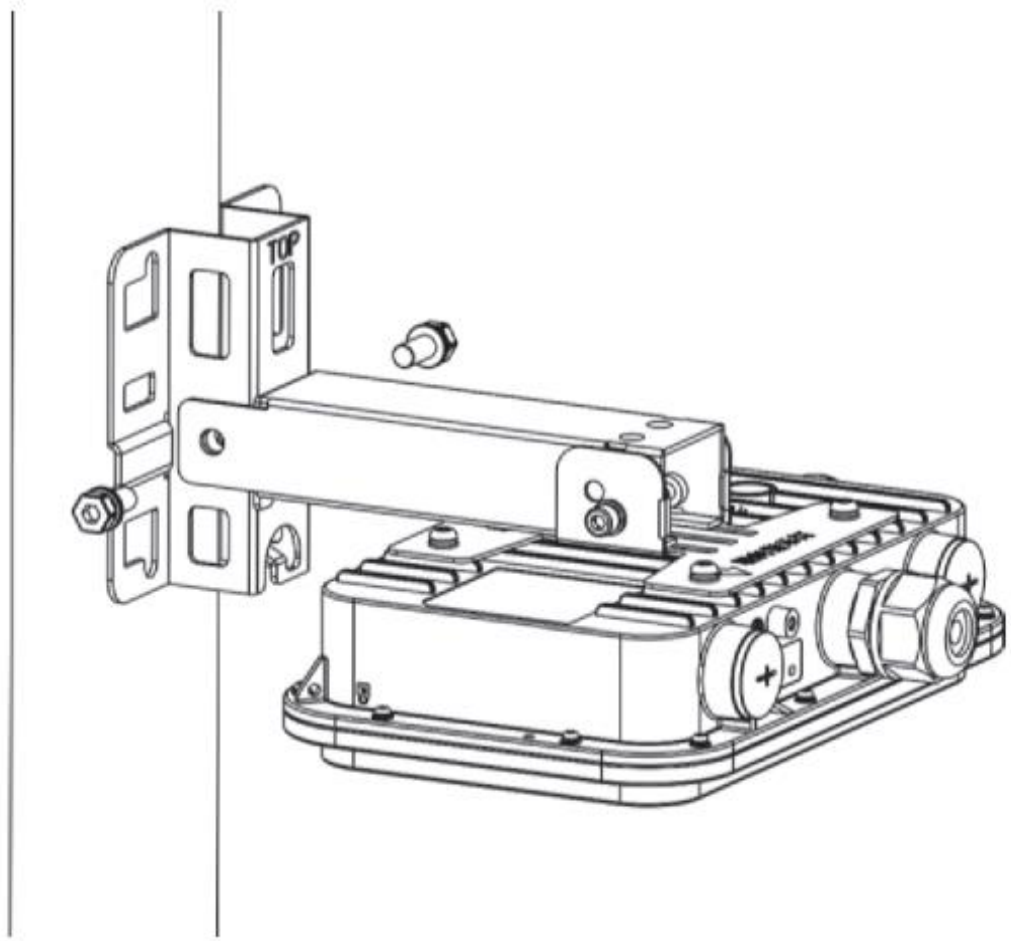

3.4.3 Mounting the Access Point on a Ceiling

(1) Secure the mounting bracket to a ceiling using four M6 expansion anchors.

Figure 3-10 Securing Mounting Bracket to Ceiling

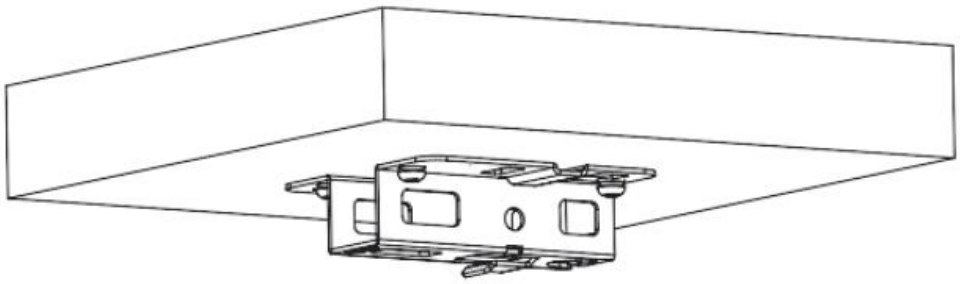

(2) Loosen the two M6 screws on the mounting plate assembly to remove the mounting arm. Rotate the mounting arm by 90 degrees clockwise until it is upright. Tighten two M6 screws to secure the mounting arm to the mounting plate.

Figure 3-11 Rotating Mounting Arm by 90 Degrees Clockwise

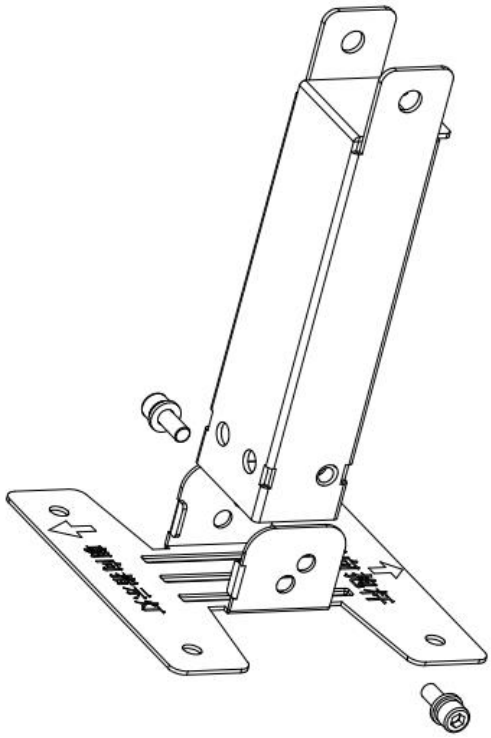

(3) Secure the mounting plate assembly to the bottom of the RG-AP680-O(V3) access point using four M5 screws.

(4) Position the mounting arm on the mounting bracket with its two holes aligned to the screw holes on the mounting bracket.

Figure 3-12 Positioning Mounting Arm on Mounting Bracket

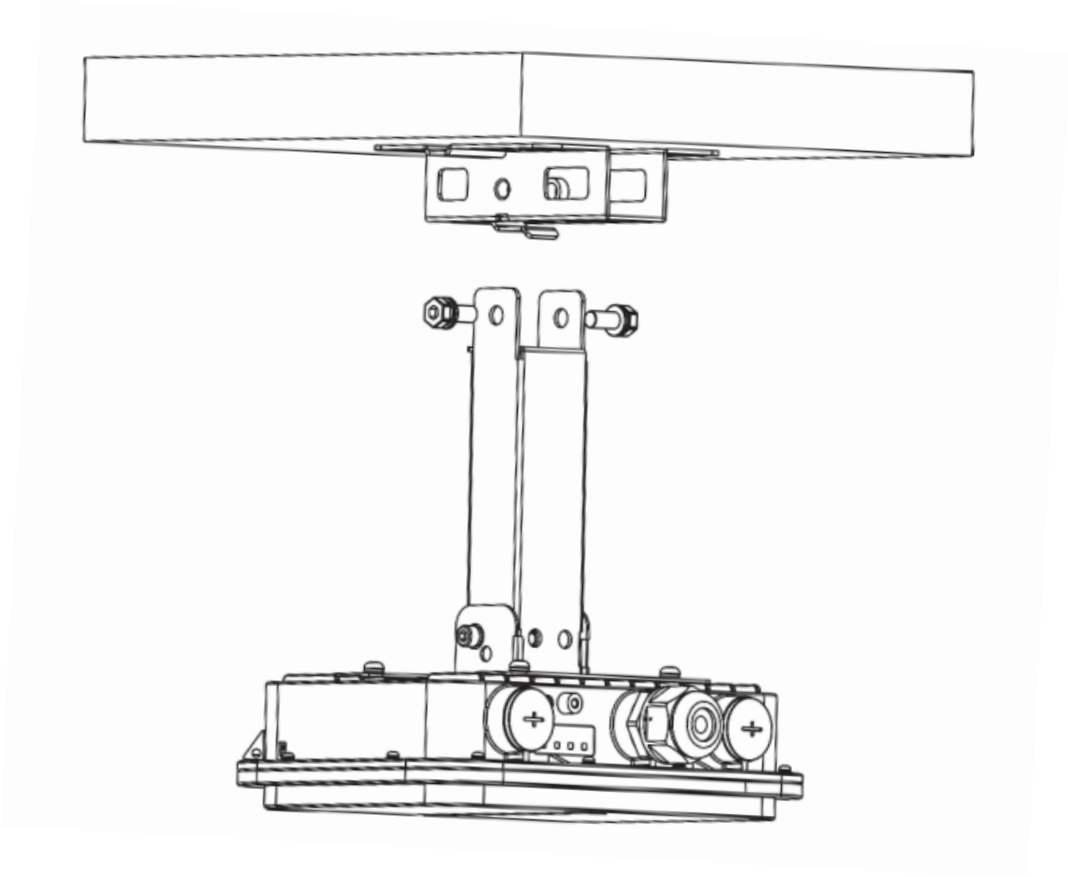

(5) Use two M8 screws to secure the mounting arm to the mounting bracket.

Figure 3-13 Securing Mounting Arm to Mounting Bracket

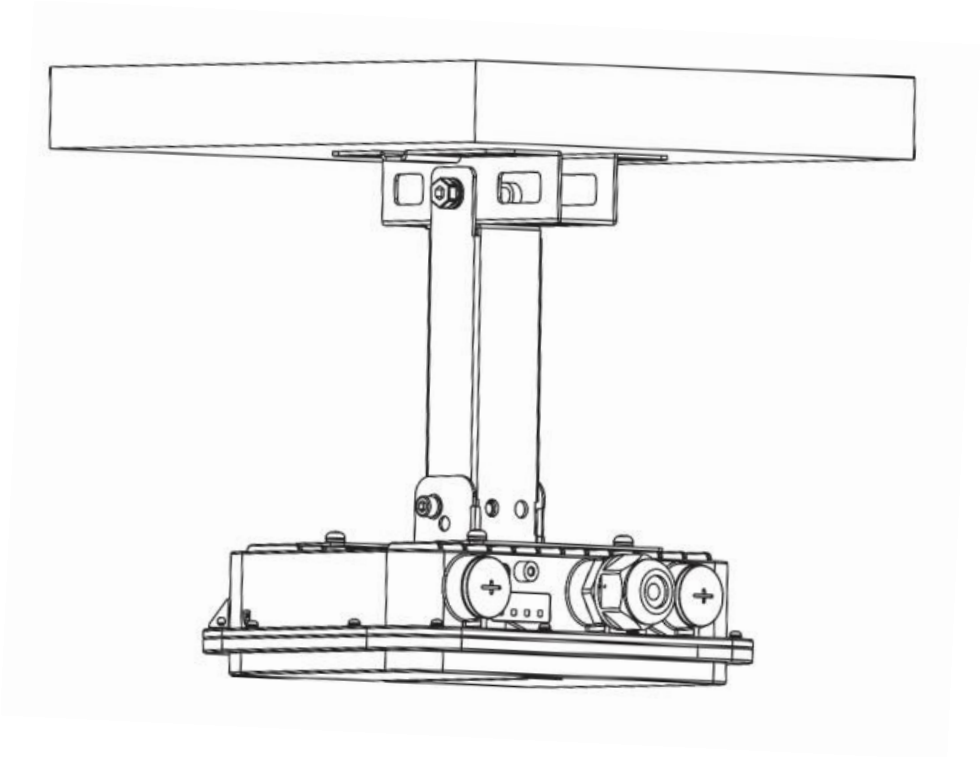

Caution

- Use matching screws for the screw holes, and tighten the structural parts in different installation links.
- Tighten all fastening screws. If any screw is not installed, the device may vibrate violently, shift, or fall down.
- After installation, check that all screws are tightened to prevent the device from falling down.

3.4.4 Removing the Access Point

Proceed in the reverse order of the installation to remove the access point.

3.5 Installing an Optical Module

Insert an optical module into the SFP port on the access point and ensure that the optical module is properly installed.

Figure 3-14 Installing an Optical Module

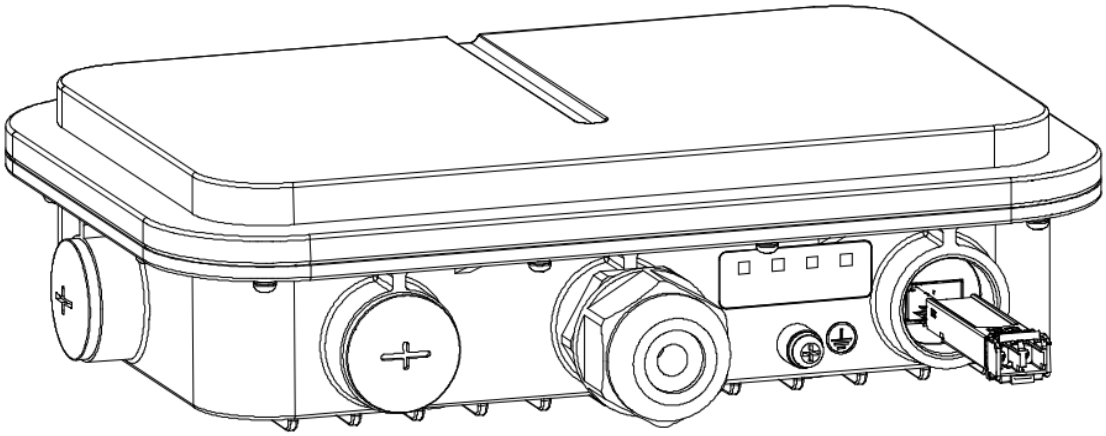

3.6 Installing the Cables

3.6.1 Installing the Grounding Cable

The grounding cable needs to be made on site. Connect one end of the grounding cable delivered with the device to the ground hole of the device through an OT terminal and the other end to the ground through another OT terminal. The cable length can be trimmed based on the on-site situation to avoid waste.

Figure 3-15 Installing Grounding Cable

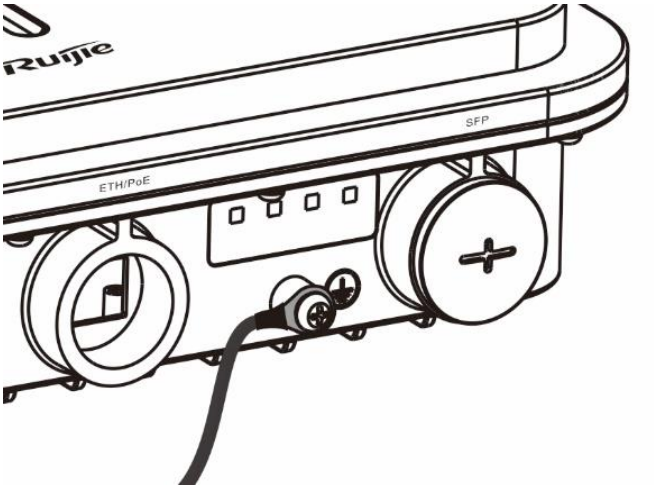

3.6.2 Installing the Ethernet Cable

Caution

- Make sure that the RJ45 connector is inserted into the access point correctly. Otherwise, the RJ45 connector will be damaged when you tighten the cable gland.
- When removing the Ethernet cable, remove the cable gland first and then the RJ45 connector connecting to the access point.

(1) Trim an Ethernet cable according to the distance between the access point and the power supply.

(2) Insert the unterminated end of the Ethernet cable through part D (compression cap), C (grommet) and B (split gasket) in sequence.

Figure 3-16 Exploded View of Cable Gland Assembly

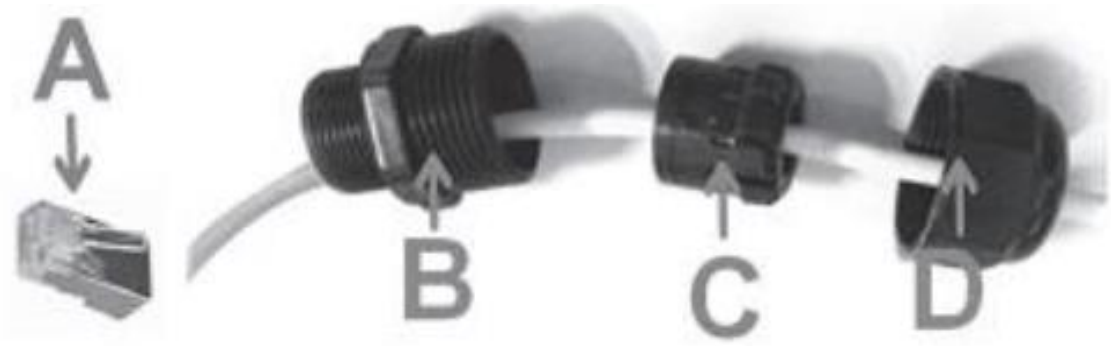

(3) Install an RJ45 connector on the unterminated end of the Ethernet cable using an Ethernet cable installation tool. Wrap waterproof materials around the Ethernet cable between part B (split gasket) and C (grommet).

Figure 3-17 Wrapping Waterproof Materials Around Ethernet Cable

(4) Insert the RJ45 connector into the Ethernet/PoE port of the access point, and tighten the cable gland assembly in sequence of part B, C and D to complete the installation.

3.6.3 Installing the Fiber-Optic Cable

Note

- The cable gland can only hold the LC to LC fiber-optic cable with a diameter ranging from 2.5 mm to 2.9 mm (0.10 in. to 0.11 in.).
- Connect or remove the LC to LC fiber-optic cable based on the guide. Otherwise, the fiber-optic cable may be damaged.

(1) Select an LC-LC fiber-optic cable with a diameter ranging from 2.5 mm to 2.9 mm (0.10 in. to 0.11 in.).

(2) A cable gland assembly includes four components: A (adapter base), B (split gasket), C (grommet), and D (compression cap). B (split gasket) can be pressed into C (grommet) and also can be removed from C (grommet). Insert the unterminated end of a fiber-optic cable through part D, C, B and A in sequence.

Figure 3-18 Exploded View of Cable Gland Assembly

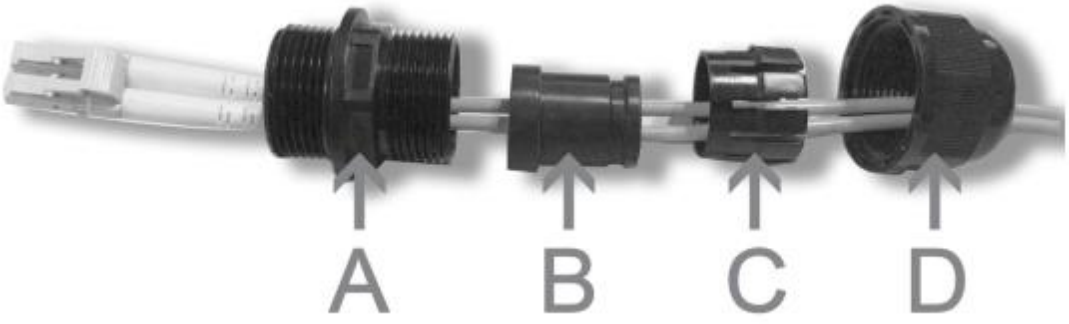

(3) Install an RJ-45 connector on the unterminated end of the fiber-optic cable. Carefully insert the RJ-45 connector into the SFP port of the access point. Thread A (adapter base) into the SFP port.

(4) Slide B (split gasket) and C (grommet) along the cable, pressing firmly to seat B (gasket) completely into C (grommet).

(5) Tighten D (compression cap) until C (grommet) and B (gasket) compress on to the cable and provide cable strain relief. Use a waterproof tape to tighten the cable gland.

Caution

When removing the cable gland, proceed in the reverse order of the installation. Start by loosening D (compression cap). Otherwise, the fiber-optic cable may be damaged.

3.6.4 Installing the Power Cord

Note

When the access point is powered by the DC power supply, keep the ports facing downward. In this case, the access point can be protected against only splashing water.

The DC power cord should be used in combination with the cable gland. Paint waterproof cement and wrap the waterproof tapes around the DC power cord between B (split gasket) and C (grommet). The waterproof power cord should be at least 5 mm (0.20 in.) in diameter.

Figure 3-19 Installing DC Power Cord

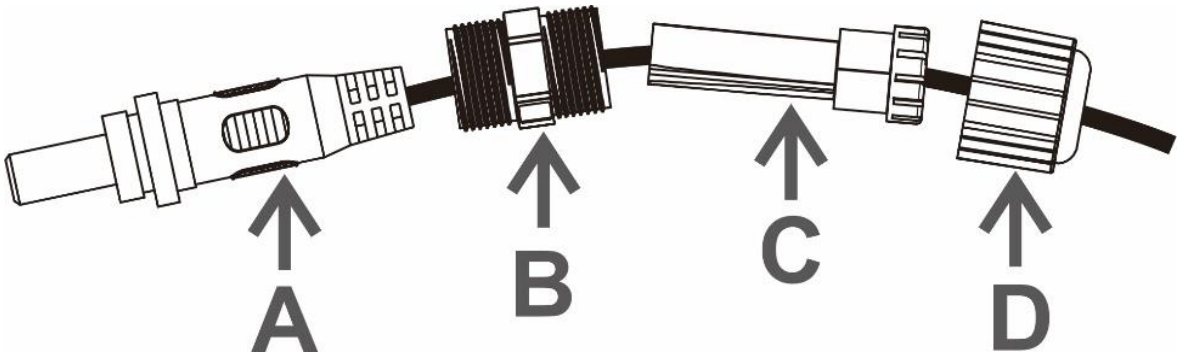

3.7 Bundling Cables

3.7.1 Precautions

- Bundle cables neatly to ensure aesthetics.
- Bend twisted pairs naturally or to a large radius close to the connector.
- Do not over tighten twisted pair bundle as it may reduce the cable life and performance.

3.7.2 Bundling Description

After the cables are connected with the device through the waterproof plugs and power-on is normal, use a cable tie to bundle the cables on the mounting plate and then fix the cables neatly.

Figure 3-20 Bundling Cables on Mounting Bracket Using Cable Tie

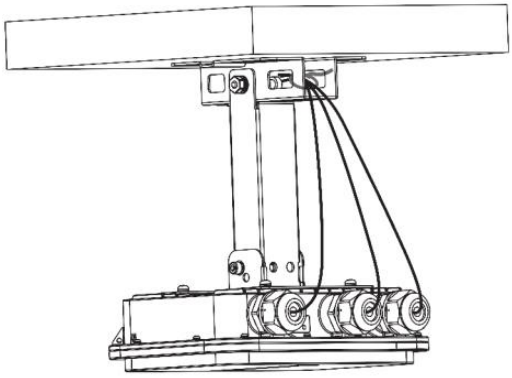

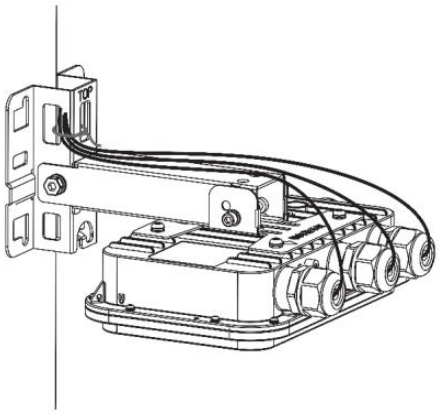

Caution

After the cables are bundled, check whether waterproof measures are taken properly.

3.8 Checklist After Installation

3.8.1 Checking the Access Point

- Verify that the external power supply matches with the requirement of the access point.
- Verify that the access point is securely fastened.

3.8.2 Checking Cable Connection

- Verify that the UTP/STP cable or the fiber-optic cable matches with the port type.
- Verify that cables are properly bundled.

3.8.3 Checking the Power Supply

- Verify that the power cord is properly connected and compliant with safety requirements.
- Verify that the access point is operational after power-on.

4 Verifying Operating Status

4.1 Setting up Configuration Environment

The access point can be powered by PoE or local power .

- When the access point is powered by using DC or PoE, verify that the power supply functions properly and meets safety requirements.
- Connect the access point to an access controller through a twisted pair cable.
- When the serial port of the access point is connected to a PC for debugging, verify that the PC and PoE switch are properly grounded.

4.2 Powering on the Access Point

4.2.1 Checklist Before Power-on

- Verify that the power cord is properly connected.
- Verify that the input voltage meets with the requirement of the access point.

4.2.2 Checklist After Power-on (Recommended)

After power-on, check the following items:

- Verify that there are system logs printed on the terminal interface.
- Verify the LED status of the access point.

5 Monitoring and Maintenance

5.1 Monitoring

5.1.1 LED

You can observe the LEDs to monitor the device status.

5.1.2 CLI Commands

You can run related commands on the CLI to remotely monitor the device, including:

- Port configuration and status
- System logs

Note

- For details about the commands, see the configuration guide.
- The access point supports remote maintenance.

5.2 Remote Maintenance

- If the access point works in the fat mode, you can log in to the access point for remote maintenance.
- If the access point works in the fit mode, you can use a wireless controller to manage and maintain the access point uniformly.

5.3 Hardware Maintenance

If the hardware is faulty, please contact Ruijie technical support.

6 Common Troubleshooting

6.1 General Troubleshooting Flowchart

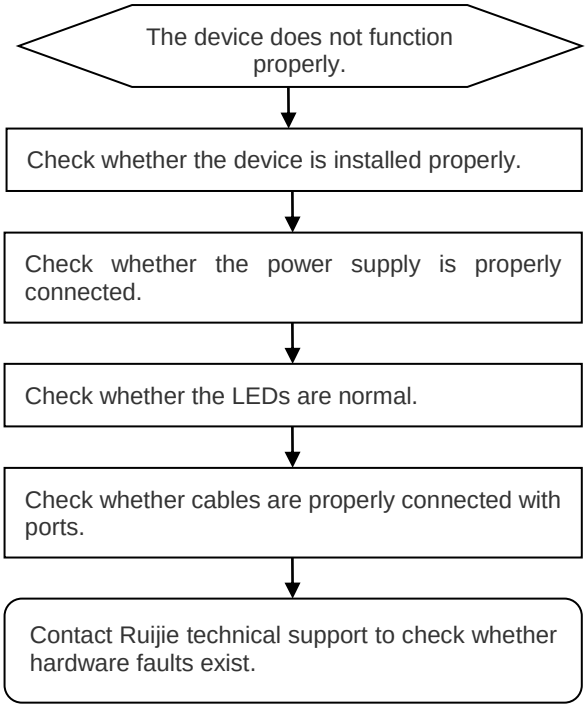

6.2 Common Faults

6.2.1 Ethernet Port Is Not Working After the Ethernet Cable Is Plugged In

Verify that the peer device is working properly. And verify that the Ethernet cable is capable of providing the required data rate and is properly connected.

6.2.2 LED Is Off for a Long Time

- PoE power feeding: Check whether the other end of the PoE cable supports 802.11af or higher PoE standards, and then check whether the Ethernet cable is properly connected.
- DC power supply: Check whether there is power supply, and whether the power supply unit works normally.

6.2.3 LED Is Steady Red

The LED keeps steady red for a long time, indicating that the Ethernet port is not connected. Verify the Ethernet connection.

6.2.4 LED Is Steady Green

The device performs initialization after power-on. During this period, the LED keeps steady green and does not turn normal blue until the initialization is completed. Note: If the steady green persists for an hour, the device initialization fails and the device is faulty.

6.2.5 LED Keeps Blinking Blue at an Interval of 0.2s (in Fit Mode)

Sometimes the access point performs software upgrade after power-on. During this period, the LED keeps blinking blue at an interval of 0.2s and does not turn steady blue until the upgrade is completed. Note: Do not plug or unplug the power cord when the LED is blinking as software upgrade takes time. If the blinking persists for 10 minutes, the device fails to complete software upgrade and is faulty.

6.2.6 LED Does Not Turn Steady Blue or Blinking Blue

If the LED does not turn steady blue or blinking blue after the system starts, the access point probably has not established a proper CAPWAP connection with the wireless controller. Verify that the wireless controller is operational and configured properly.

6.2.7 Clients Can Not Find the Access Point

(1) Verify that the access point is properly powered.

(2) Verify that the Ethernet port is correctly connected.

(3) Verify that the access point is correctly configured.

(4) Move the client endpoint to adjust the distance between the client and the access point.

7 Appendix

7.1 Connectors and Media

- 1000BASE-T/100BASE-TX/10BASE-T port

The 1000BASE-T/100BASE-TX/10BASE-T is a 10/100/1000 Mbps port that supports auto-negotiation and auto MDI/MDIX Crossover.

Compliant with IEEE 802.3ab, the 1000BASE-T port requires 100-ohm Category 5/5e UTP or STP with a maximum distance of 100 meters (328.08 feet).

The 1000BASE-T port uses four twisted pairs for data transmission. Twisted pairs for the 1000BASE-T port are connected as shown in the following figure.

Figure 7-1 1000BASE-T Twisted Pairs Connection

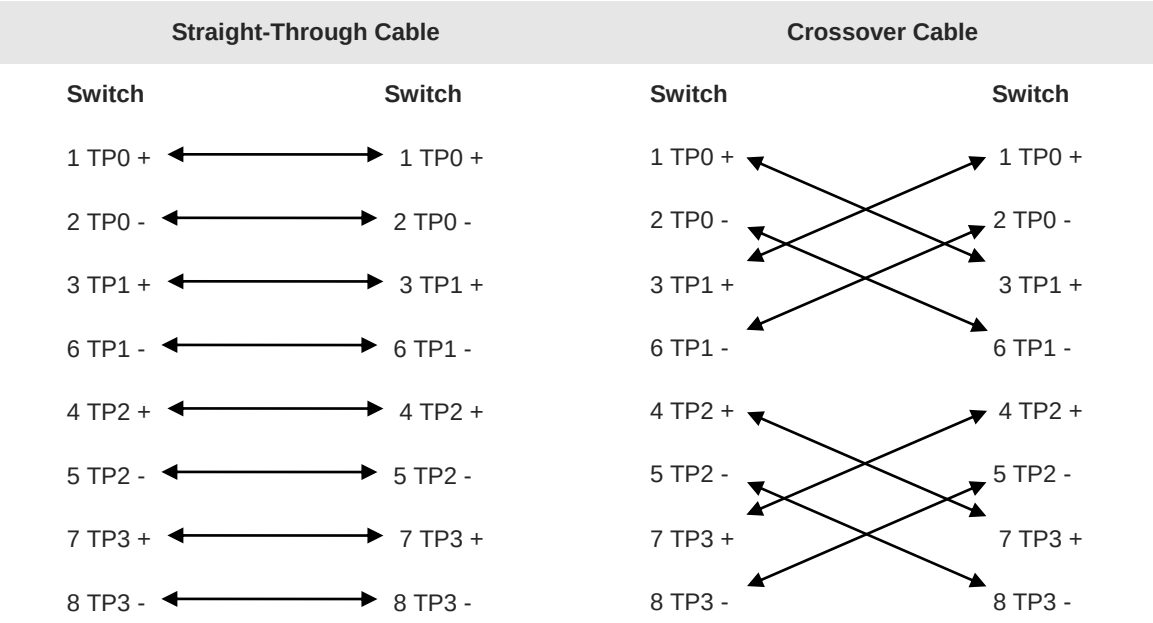

100BASE-TX/10BASE-T port can also be connected by cables of the preceding specifications. Besides, the 10BASE-T port can be connected by 100-ohm Category 3, Category 4, and Category 5 cables with a maximum distance of 100 meters (328.08 feet). 100BASE-TX port can be connected by 100-ohm Category 5 cables with a maximum distance of 100 meters (328.08 feet). The following figure lists definitions of pin signals for the 100BASE-TX/10BASE-T port.

Figure 7-2 100BASE-TX/10BASE-T Pin Assignments

Pin	Socket	Plug
1	Input Receive Data+	Output Transmit Data+
2	Input Receive Data-	Output Transmit Data-

Pin	Socket	Plug
3	Output Transmit Data+	Input Receive Data+
6	Output Transmit Data-	Input Receive Data-
4, 5, 7, 8	Not Used	Not Used

The following figure shows feasible connections of the straight-through and crossover twisted pairs for a 100BASE-TX/10BASE-T port.

Figure 7-3 100BASE-TX/10BASE-T Twisted Pairs Connection

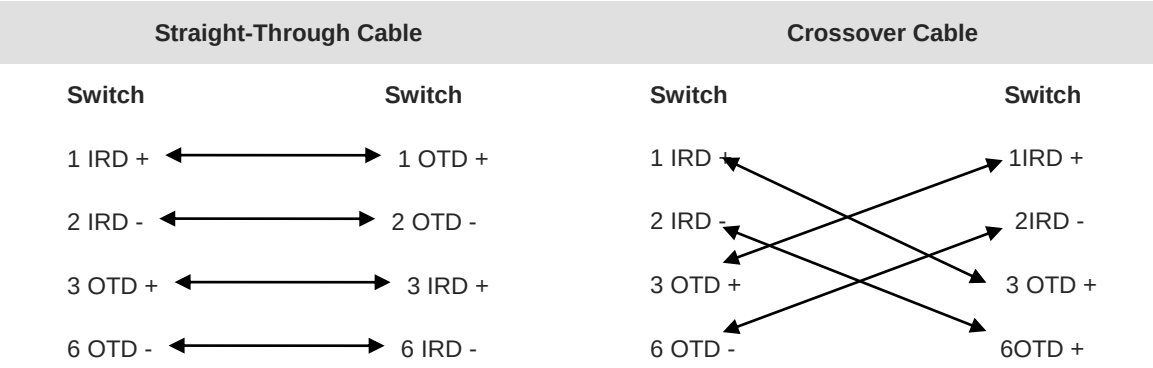

7.2 Cabling

During installation, route cable bundles upward or downward along the sides of the rack depending on the actual situation in the equipment room. All cable connectors should be placed at the bottom of the cabinet rather than be exposed outside of the cabinet. Power cords are routed beside the cabinet, and top cabling or bottom cabling is adopted according to the actual situation in the equipment room, such as the positions of the DC power distribution box, AC socket, or lightning protection box.

- Requirement for the Minimum Cable Bend Radius
  - The bend radius of a power cable, communication cable, or flat cable should be over five times greater than their respective diameters. The bend radius of these cables that is often bent or plugged or unplugged should be over seven times greater than their respective diameters.
  - The bend radius of a fixed common coaxial cable should be over seven times greater than its diameter. The bend radius of the common coaxial cable that is often bent or plugged should be over 10 times greater than its diameter.
  - The minimum bend radius of a high-speed cable, such as an SFP+ cable should be over five times the overall diameter of the cable. If the cable is frequently bent, plugged or unplugged, the bend radius should be over 10 times the overall diameter.
- Precautions for Cable Bundling
  - Before cables are bundled, mark labels and stick the labels to cables wherever appropriate.
  - Cables should be neatly and properly bundled in the cabinet without twisting or bending, as shown in Figure 7-4.

Figure 7-4 Bundling Cables

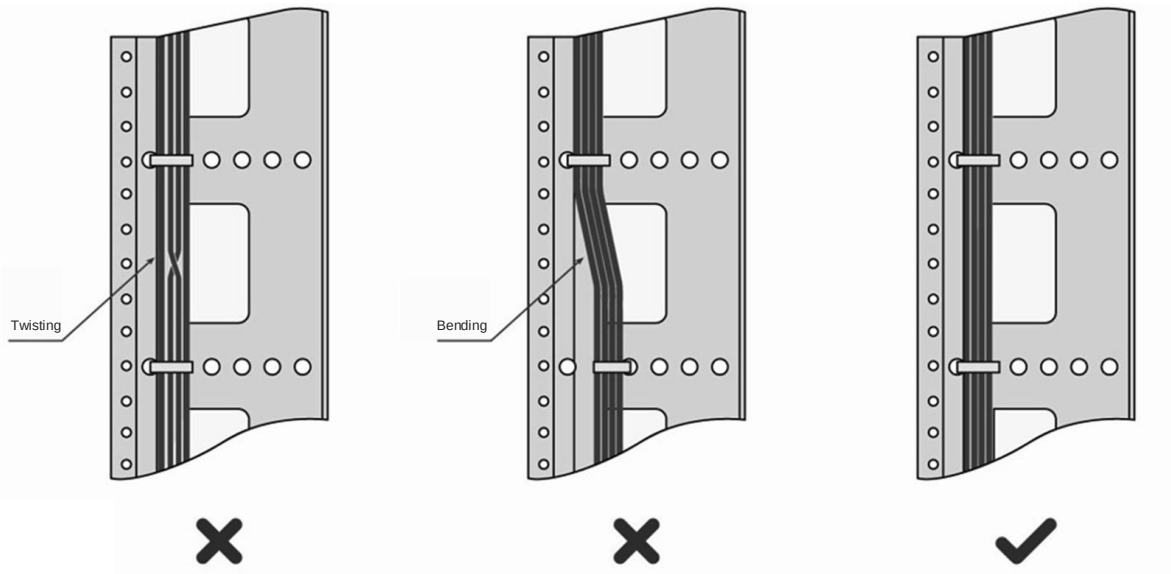

  - Cables of different types (such as power cables, signal cables, and grounding cables) should be separated in cabling and bundling. Mixed bundling is not allowed. When they are close to each other, it is recommended that crossover cabling be adopted. In the case of parallel cabling, maintain a minimum distance of 30 mm between power cords and signal cables.

- The cable management brackets and cabling troughs inside and outside the cabinet should be smooth without sharp corners.
- The metal hole traversed by cables should have a smooth and fully rounding surface or an insulated lining.
- Proper cable ties should be selected to bundle up cables. It is forbidden to connect two or more cable ties to bundle up cables.
- After bundling up cables with cable ties, cut off the remaining part. The cut should be smooth and trim, without sharp corners, as shown in Figure 7-5.

Figure 7-5 Cutting off Excess Cable Tie

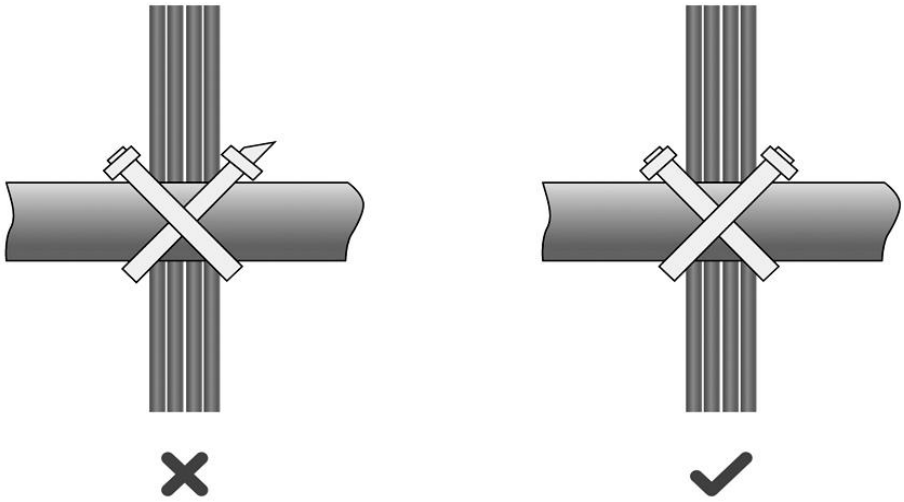

- When cables need to be bent, bind them first but do not tie cable ties within the bend. Otherwise, considerable stress may be generated in cables, breaking cable cores, as shown in Figure 7-6.

Figure 7-6 Binding Cables

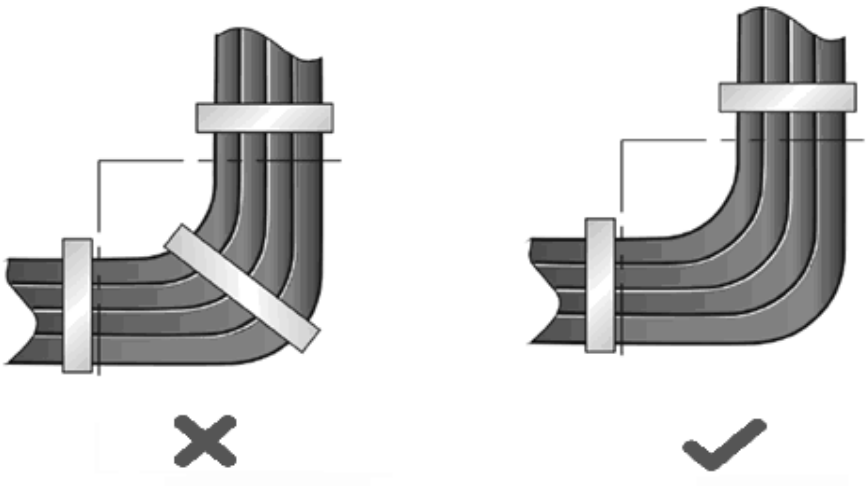

- Cables not to be assembled or remaining parts of cables should be folded and placed in a proper position of the cabinet or cable trough. The proper position indicates a position that will not affect device running or cause device damage or cable damage during debugging.
- 220 V and –48 V power cables must not be bundled on the guide rails of moving parts.

- The power cables connecting moving parts such as door grounding wires should be reserved with some access after being assembled to avoid suffering tension or stress. When a moving part reaches the installation position, the remaining cable part should not touch heat sources, sharp corners, or sharp edges. If heat sources cannot be avoided, high-temperature cables should be used.
- When screw threads are used to fasten cable terminals, the bolt or screw must be tightly fastened, and anti-loosening measures should be taken, as shown in Figure 7-7.

Figure 7-7 Fastening Cable Lugs

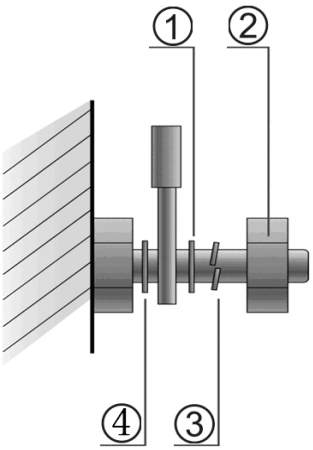

① Flat washer	③ Spring washer
② Nut	④ Flat washer

- Hard power cords should be fastened in the terminal connection area to prevent stress on terminal connection and cable.
- Do not use self-tapping screws to fasten terminals.
- Power cables of the same type and in the same cabling direction should be bundled up into cable bunches, with cables in cable bunches clean and straight.
- Bundle up cables using cable ties based on the following table.

Cable Bunch Diameter	Distance Between Every Binding Point
10 mm (0.39 in.)	80 mm to 150 mm (3.15 in. to 5.91 in.)
10 mm to 30 mm (0.39 in. x 1.18 in.)	150 mm to 200 mm (5.91 in. x 7.87 in.)
30 mm (1.18 in.)	200 mm to 300 mm (7.87 in. x 11.81 in.)

- No knot is allowed in cabling or bundling.
- For wiring terminal blocks (such as circuit breakers) with cord end terminals, the metal part of the cord end terminal should not be exposed outside the terminal block when assembled.

7.3 Optical Modules and Specifications

We provide appropriate optical modules according to the port types. You can select the module to suit your specific needs. The optical module types and corresponding specifications are provided for reference.

Table 7-1 SFP Modules and Specifications

Wavelength (nm)	Fiber Type	DDM	Intensity of Transmitted Light (dBm)		Intensity of Received Light (dBm)	
			Min.	Max.	Min.	Max.
850 Tx/850 Rx	MMF	Supported	N/A	–4	N/A	–17
1310 Tx/1310 Rx	SMF	Supported	N/A	3	N/A	–3

Table 7-2 SFP Module Cabling Specifications

Interface Type	Fiber Type	Core Specifications (μm)	Max. Cabling Distance
LC	MMF	50/125, 62.5/125	0.3 km (984.25 ft.)
LC	SMF	9/125	40 km (131233.60 ft.)

Caution

- For optical modules with a maximum cabling distance of over 40 km (24.85 miles), install an optical attenuator to avoid overload when using short-distance SMFs.
- The optical module is a laser device. Please do not look into the laser beam directly.
- To keep the optical module clean, make sure that the unused ports remain capped.

Table 7-3 BIDI Modules and Specifications

Speed/Distance	Paring Models
2.5GE/0.3 km (984.25 ft.)	SM1550-BIDI-I SM1310-BIDI-I

Caution

The BIDI modules must be in paired use. For example, if SM1550-BIDI-I is used at one end, the peer end must be configured with SM1310-BIDI-I.

7.4 DC Connector Specifications

- Input voltage: 48 V DC; rated current: 0.35 A

Table 7-4 DC Connector Specifications

Inner Diameter	Outer Diameter	Depth	Polarity
2.0 mm (0.08 in.)	6.3 mm (0.25 in.)	9.8 mm (0.39 in.)	Inner Positive, Outer Negative
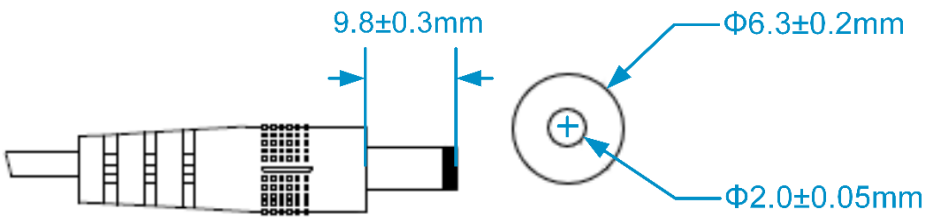
Figure 7-8 DC Connector Specifications